CHATHAM COUNTY MAJOR SUBDIVISION REVIEW CHECKLIST

Subdivision Name Harrison Pond, LLC

Review For: [ ] Sketch [X] Prelim [ ] Final

Attach all supporting documentation regarding these approvals. If approvals are still pending, attach applications for approval.

SKETCH DESIGN REVIEW	APPROVAL DATE
[ ] 25 Copies of Plat with topo along with one (1) 8-1/2 x 11 copy	------
[ ] Application w/Complete Adjacent Owner Addresses	------
[ ] Soil Scientist Report and soil map {) **1 electronic copy of all items above (see Digital Document Requirements)**	------
PRELIMINARY PLAT REVIEW	
[**X**] 25 Copies of Plat along with one (1) 8-1/2 x 11 copy	.....
[**X**] Application w/ Complete Adjacent Owner Addresses	.....
[**X**] Detailed Soils Map and Letter of explanation or D.E.M. approval	1/10/07
{see Requirements for soil scientist report)	
[**X**] NCDOT Approval (if public roads)	1/11/07
[**X**] DOT Comm. Driveway Permit	10/30/06
[**X**] Erosion Control Plan Approval (if new roads or one acre disturbed)	1/12/07
[ ] U.S. Army Corps of Engineers Permit (if appl) **N/A; see letter**	1/6/06
[**X**] Road Name Request Form	1/4/07
[**X**] County Public Water Approval (if applicable)	1/4/07
[**X**] State Public Water Approval (if applicable)	1/4/07
[**X**] Chatham Co. Schools' Road Comments (if new roads)	1/11/07
[ ] Stormwater Management Plan Approval (if appl) **N/A**	____/____/____
[ ] Economic & Environmental Impact Study (if appl) **N/A**	____/____/____
[ ] Water / Sewer Impact Statement (if appl) **N/A** { } **1 electronic copy of all items above (see Digital Document Requirements)**	____/____/____
FINAL PLAT REVIEW	
[ ] 25 Copies of Plat	------
[ ] Application	.....
{ } **1 electronic copy of all items above (see Digital Document Requirements)**	____/____/____
[ ] **Chatham County Environmental Health Division** septic improvement permits or NCDWQ septic permits for each lot.	____/____/____
[ ] Road Completion Certificate or Financial Guarantee	____/____/____
[ ] Utilities Completion Cert. or Financial Guarantee	____/____/____

Comment_____

_____

Date Complete Application Rec'd: _____/_____/_____ By: _____

Chatham County Planning Department
P.O. Box 54
Pittsboro, NC 27312
Tel: (919) 542-8204
Fax: (919) 542-0527

Type of Review
[ ] **Sketch**
[X] **Preliminary**
[ ] **Final**

MAJOR SUBDIVISION APPLICATION

Name of Subdivision: Harrison Pond

Subdivision Applicant:

Name: Harrison Pond, LLC
c/o William J. Brinn, Jr.
Address: Post Office Box 607
Pittsboro, NC 27312

Phone:(W) (919) 880-9542
Phone:(H)_____ Fax:_____
E-Mail: joebrinn@nc.rr.com

Subdivision Owner: Harrison Pond, LLC

Name: Harrison Pond, LLC
Address: P. O. Box 607
Pittsboro, NC 27312

Phone:(W) (919) 880-9542
Phone:(H)_____ Fax:_____
E-Mail: joebrinn@nc.rr.com

Township: Baldwin **Zoning:** RA-40
Flood Map #9754, 9755, 9744 **Zone:** X
Watershed WS-IV-PA
River Corridor

P.I.N. # 9754-09-9218
Parcel # 1907
Existing Access Road: S.R. 1532

Total Acreage: 74.242 acres

Total # of Lots: 42 **Min. Lot Size:** .93 acres

Ph. I Acreage _____

Ph. I # of lots 42 **Max. Lot Size:** 3.57 acres

Ph. II Acreage _____

Ph. II # of lots _____ **Avg. Lot Size:** 1.5 acres

Ph. III Acreage _____

Ph. III # of lots _____

Type of new road: [ ] Private/Length _____ [X] Public/Length 4,420 linear feet

Road Surface:
[X] paved
[ ] gravel

Water System:
[ ] individual wells
[ ] community wells
[X] public system
name Chatham County
name _____

Sewer Sytem:
[X] septic systems
[ ] community system
[ ] public system

List other facilities: commercial, recreation, etc., and the approximate acreage or square footage:

_____

William J. Brinn Jr. Date 1/12/07 William J. Brinn Jr. Date 1/12/07

Signature of Applicant *Signature of Owner*

For Office Use Only:

Notes: _____

Approved by County Commissioners: *Sketch* _____

Preliminary _____

Final _____

Payment: Date_____/_____/_____ Amount: $_____

HARRISON POND ADJOINING LANDOWNERS

Chatham County Board of Education
Post Office Box 128
Pittsboro, NC 27312
Parcel No. 70043 and 70154

Mr. William P. Cleaver
Mrs. Julia M. Cleaver
295 River Forest Road
Pittsboro, NC 27312
Parcel No. 1166

Ms. Linda F. Rothman
11 Wilder Ridge
Chapel Hill, NC 27517-7603
Parcel No. 1162

Ms. Virginia M. Carr
100 Hunter Place
Carrboro, NC 27510
Parcel No. 1167

DeJesus Augustin Lopez
Leticia Ramos Mateo
371 River Forest Road
Pittsboro, NC 27312
Parcel No. 1167

Ms. Phyllis D. Bazzari
391 River Forest Road
Pittsboro, NC 27312
Parcel No. 1170

Ms. Patricia A. Lange
7925 Sligo Creek Parkway #A
Takoma Park, MD 20912-6303
Parcel No. 1160

Ms. Linda M. Stainback
457 River Forest Road
Pittsboro, NC 27312
Parcel No. 1168

Mr. Michael O. Phillips
Ms. Carole Lee Bresky
483 River Forest Road
Pittsboro, NC 27312
Parcel No. 61679

Ms. Roberta E. Snyder
Mr. Fred C. Kirkman
517 River Forest Road
Pittsboro, NC 27312
Parcel No. 1169

Mr. Wallace Lee Rowland
Mrs. Betty Hoey Rowland & Jeffrey Ivor Rowland
549 River Forest Road
Pittsboro, NC 27312
Parcel No. 1163

Ms. Connie Dianne Hall
567 River Forest Road
Pittsboro, NC 27312
Parcel No. 1151

Mr. Craig A. Greiner
Mrs. Renae D. Greiner
567 River Forest Road
Pittsboro, NC 27312
Parcel No. 1151

Mr. Mark D. Kellam
709 River Forest Road
Pittsboro, NC 27312
Parcel No. 1620

Ms. Margrue M. Booker
4019 Oak Hill Road
Chapel Hill, NC 27514
Parcel No. 65703

Joel T. Friedman
Nannette C. Friedman
25 Hawfields Drive
Pittsboro, NC 27312
Parcel No. 65703

Mr. Kenneth Mann, Jr.
112 Hawfields Drive
Pittsboro, NC 27312
Parcel No. 66183

Mr. Ronald C. Thayer
Mrs. Nora K. Thayer
174 Hawfields Drive
Pittsboro, NC 27312
Parcel No. 68358

Ms. Teri Radmer Smith
104 S. Tamilynn Circle
Cary, NC 27513
Parcel No. 69900

Mr. Michael Ohagerty
Ms. Shannon Morris
24 Pine Ridge Road
Pittsboro, NC 27312
Parcel No. 69901

Mr. Frank Jones
Mrs. Carolyn F. Jones
46 Pine Ridge Road
Pittsboro, NC 27312
Parcel No. 69902

Ms. Janel D. Hopkins
Mr. Seth M. Hopkins
106 Pine Ridge Road
Pittsboro, NC 27312
Parcel No. 69903

Mrs. H.H. Mann
249 Herbert Mann Road
Pittsboro, NC 27312
Parcel No. 1544

Mr. Mark Timothy Elliott
Mrs. Betsey B. Elliott
c/o Northen Blue
P. O. Box 2208
Chapel Hill, NC 27515
Parcel No. 66555

Mr. Robert Tate Hamlet, Jr.
Mrs. Teresa Hamlet
2673 Lamont Norwood Road
Pittsboro, NC 27312
Parcel No. 66555

Mrs. Judith H. Deal
Mr. Stephen Deal
2406 Woodruff Avenue
High Point, NC 27265
Parcel No. 66556

Mr. Michael Alan Shachtman
Mrs. Susanne Coffey Shachtman
64 Harrison Court
Pittsboro, NC 27312
Parcel No. 79339

Musigny Inc.
127 Araya Lane
Chapel Hill, NC 27516
Parcel No. 79340

Mr. Robert C. Poitras
Mrs. Taylor T. Poitras
82 Harrison Court
Pittsboro, NC 27312
Parcel No. 79341

Mr. David Snyder
Mrs. Andrea Snyder
104 Harrison Court
Pittsboro, NC 27312
Parcel No. 79342

Mr. Richard V. Quimby
Ms. Catherine G. Trott
106 Harrison Court
Pittsboro, NC 27312
Parcel No. 79343

Ms. Kelley Lane
Mr. Michael Ball
124 Harrison Court
Pittsboro, NC 27312
Parcel No. 79344

HARRISON POND ADJOINING LANDOWNERS

Chatham County Board of Education
Post Office Box 128
Pittsboro, NC 27312
Parcel No. 70043 and 70154

Mr. William P. Cleaver
Mrs. Julia M. Cleaver
295 River Forest Road
Pittsboro, NC 27312
Parcel No. 1166

Ms. Linda F. Rothman
11 Wilder Ridge
Chapel Hill, NC 27517-7603
Parcel No. 1162

Ms. Virginia M. Carr
100 Hunter Place
Carrboro, NC 27510
Parcel No. 1167

DeJesus Augustin Lopez
Leticia Ramos Mateo
371 River Forest Road
Pittsboro, NC 27312
Parcel No. 1167

Ms. Phyllis D. Bazzari
391 River Forest Road
Pittsboro, NC 27312
Parcel No. 1170

Ms. Patricia A. Lange
7925 Sligo Creek Parkway #A
Takoma Park, MD 20912-6303
Parcel No. 1160

Ms. Linda M. Stainback
457 River Forest Road
Pittsboro, NC 27312
Parcel No. 1168

Mr. Michael O. Phillips
Ms. Carole Lee Bresky
483 River Forest Road
Pittsboro, NC 27312
Parcel No. 61679

Ms. Roberta E. Snyder
Mr. Fred C. Kirkman
517 River Forest Road
Pittsboro, NC 27312
Parcel No. 1169

Mr. Wallace Lee Rowland
Mrs. Betty Hoey Rowland & Jeffrey Ivor Rowland
549 River Forest Road
Pittsboro, NC 27312
Parcel No. 1163

Ms. Connie Dianne Hall
567 River Forest Road
Pittsboro, NC 27312
Parcel No. 1151

Mr. Craig A. Greiner
Mrs. Renae D. Greiner
567 River Forest Road
Pittsboro, NC 27312
Parcel No. 1151

Mr. Mark D. Kellam
709 River Forest Road
Pittsboro, NC 27312
Parcel No. 1620

Ms. Margrue M. Booker
4019 Oak Hill Road
Chapel Hill, NC 27514
Parcel No. 65703

Joel T. Friedman
Nannette C. Friedman
25 Hawfields Drive
Pittsboro, NC 27312
Parcel No. 65703

Mr. Kenneth Mann, Jr.
112 Hawfields Drive
Pittsboro, NC 27312
Parcel No. 66183

Mr. Ronald C. Thayer
Mrs. Nora K. Thayer
174 Hawfields Drive
Pittsboro, NC 27312
Parcel No. 68358

Ms. Teri Radmer Smith
104 S. Tamilynn Circle
Cary, NC 27513
Parcel No. 69900

Mr. Michael Ohagerty
Ms. Shannon Morris
24 Pine Ridge Road
Pittsboro, NC 27312
Parcel No. 69901

JDG Consultants
John D. Gray
123 Cub Creek Ext
Chapel Hill, NC 27517
919-929-4105 ▪ 919-815-0698

January 10, 2007

To Whom It May Concern:

Re: Septic Site Delineation, Preparation and Approval for Harrison Pond Subdivision

As a part of the process of permit procurement, site investigations were performed on each lot within the subdivision in order to identify and document individual septic sites. These investigations were performed using hand augers and documented using handheld GPS equipment. From this site investigation, maps were prepared as an aid for evaluation to the Chatham County Health Department. Upon evaluation of these lots by the Health Department, approvals were given for all lots evaluated with permits for the sites now pending.

I hope that this information will help meet the needs of your planning goals. Should you have any questions concerning the details of the evaluation or this report please feel free to contact us at any time.

Sincerely,

Kerry Joe Johnson LSS RS

Kerry Joe Johnson, LSS RS

John D. Gray, R.S.

LICENSED SOIL SCIENTIST
KERRY JOE JOHNSON
1264
STATE OF NORTH CAROLINA

HARRISON POND
MODIFIED
LAYOUT
11/30/06

1" = 100'

5 28 5 BR
5* 2 5 BR OPTIONAL
4 12 4 BR

STATE OF NORTH CAROLINA
DEPARTMENT OF TRANSPORTATION
DIVISION OF HIGHWAYS

MICHAEL F. EASLEY.
GOVERNOR

LYNDO TIPPETT
SECRETARY

January 11, 2007

Chatham County

Subject: Subdivision - Plan Review –Harrison Pond Subdivision off of SR 1532

CE Group, Inc
Mike Zaccardo, PE
11000 Regency Parkway
Suite 410
Cary, NC 27511

Dear Mr. Zaccardo:

The N. C. Department of Transportation, Division of Highways has reviewed the construction plans as submitted to this office and approval is granted subject to the following stipulations and recommendations:

1. All Construction is to be in accordance with the details and changes in red as shown on the plans.

2. A driveway permit #19.686 has been previously issued for the entrance onto SR 1532.

3. The entire right of way is to be cleared and grubbed throughout the whole phase of the project. Please be aware that the areas within the sight distance quadrants are to be treated as right of way.

4. All soil areas within the proposed right of way and any other soil areas disturbed during construction shall be seeded and mulched immediately upon completion of roadway construction. The seeding shall be done as outlined in the seeding specification attachment.

5. The crossline drainage is approved as proposed on the construction plans. If, however field conditions dictate any changes these shall be made. If any of the property owners desire to pipe their ditches within the proposed N C DOT right of way, please advise them that this work should conform to NC DOT specifications for this type of work (see attached). If any ditches are piped and not done to the NC DOT specifications, this could result in the road not being accepted for addition to the state maintained system of roads. Any ditches piped prior to addition to the state maintained system are subject to an encroachment agreement, as are utility companies, when the road is added.

6. The typicals as shown in the plans per redlines are approved. Please note the change in the pavement radius for the offset cul-de-sac from 35' to 40'.

7. The Division of Highways will only allow mailboxes, with non-rigid type post, such as 4" x 4" wooden or small diameter metal type on new additions. Brick columns or mailboxes on rigid stands such as block, stone or any other type felt to be a traffic hazard will not be allowed within the right of way. This policy applies to all roads being considered for addition to the State Maintained System.

P.O. BOX 1164, ASHEBORO, NORTH CAROLINA 27204
PHONE (336) 629-1423 FAX (336) 629-7228

8. An erosion control plan shall require approval from Chatham County. The developer should forward this plan to Mr. Jim Willis, Erosion and Sediment Control Officer, 80 East, P.O. Box 130, Pittsboro, N.C. 27312, phone (919) 545-8343 for his review and approval.

9. As this subdivision is proposed to be public and is likely to be requested to be added to the state maintained system of roads, the developer will be responsible for providing a PE Certification, (See Attached) and testing results for base and asphalt density stating that the streets have been built in accordance with the most current "Subdivision Roads: Minimum Construction Standards" manual and with the attached approved plans. Please be advised that this PE Certification does not approve the road for addition to the State Highway System for maintenance. When the proper home density is achieved and roads have been satisfactorily maintained, the developer or property owners must submit Form SR-1, Petition for Road Addition (copy attached to this correspondence), and four (4) copies of the recorded plat to request that the road or roads be added to the State Highway system. Any maintenance problems found when the road is requested to be added must be repaired by the developer prior to the road becoming state maintained. As stated in GS 136-102.6, final acceptance by the Division of Highways of the public streets and placing them on the State highway system for maintenance shall be conclusive proof that the streets have been constructed according to the minimum standards of the board of Transportation.
10. The developer shall comply with all applicable local, state, and federal environmental regulations, and shall obtain all necessary local, state, and federal environmental permits, including, but not limited to, those related to sediment control, stormwater, wetlands, streams, endangered species, and historical sites.
11. A properly completed Verification of Compliance with the Department of Environment and Natural Resources (DENR)(page 35, attached) must be submitted prior to the road(s) being considered for addition to the NCDOT System.

12. In preparing the final plat for certification by this office and subsequent recording, the following information will be incorporated
    A. The sight distance quadrants at the intersections shall be shown either as a public easement or as the property line.
    B. Public easements for drainage throughout the development.
    C. All roads shall be shown as public and the right of way width shown.
13. If the plans of this subdivision change in a way that would cause a change in the classification of these roads from Local Residential to Residential Collector the developer will be responsible for upgrading roads to meet Residential Collector standards prior to addition the state maintenance system.
14. This approval does not approve the utilities within this subdivision. Any utilities shall be submitted for approval to this office via a properly executed Encroachment Agreement to be approved at the time the roads within the subdivision are petitioned to be added to the state system for maintenance. Please note that water valves should be located a minimum of 6' from edge of pavement, fire hydrants should be behind the right of way line and all service taps should be installed prior to paving.

If you have any further questions regarding this matter, please do not hesitate to call this office at (336) 629-1423.

Yours truly,

Reuben Blakley, PE
District Engineer

REB/
Attachments

cc: Mr. Tim Johnson, PE, Division Engineer
File

P.O. BOX 1164, ASHEBORO, NORTH CAROLINA 27204
PHONE (336) 629-1423 FAX (336) 629-7228

STATE OF NORTH CAROLINA

DEPARTMENT OF TRANSPORTATION

MICHAEL F. EASLEY.
GOVERNOR

DIVISION OF HIGHWAYS

LYNDO TIPPETT
SECRETARY

PROFESSIONAL ENGINEER CERTIFICATION

SUBDIVISIONS AND COMMERCIAL DRIVEWAYS
DIVISION 8, DISTRICT 1

DATE: _____

COUNTY: _____

SUBDIVISION NAME: _____

STREET NAMES	From Sta. No.	To Sta. No.

This is to certify that the above listed roads have been constructed in accordance with the approved plans and all aspects of the most current Subdivision Roads: Minimum Construction Standards manual.

NAME: _____

SIGNATURE: _____

NC PE LICENSE #: _____

Professional Engineer Seal

North Carolina Department of Transportation
Division of Highways
Petition for Road Addition

ROADWAY INFORMATION: (Please Print/Type)

County: _____ Road Name: _____
(Please list additional street names and lengths on the back of this form.)

Subdivision Name: _____ Length (miles): _____

Number of occupied homes having street frontage: _____ Located (miles): _____

miles N ☐ S ☐ E ☐ W ☐ of the intersection of Route _____ and Route _____ .
(Check one) (SR, NC, US) (SR, NC, US)

We, the undersigned, being property owners and/or developers of _____ in

_____ County, do hereby request the Division of Highways to add the above described road.

CONTACT PERSON: Name and Address of First Petitioner. (Please Print/Type)

Name: _____ Phone Number: _____

Street Address: _____

Mailing Address: _____

PROPERTY OWNERS

Name	Mailing Address	Telephone

INSTRUCTIONS FOR COMPLETING PETITION:

1. Complete Information Section
2. Identify Contact Person (This person serves as spokesperson for petitioner(s)).
3. Attach four (4) copies of recorded subdivision plat or property deeds, which refer to candidate road.
4. Adjoining property owners and/or the developer may submit a petition. Subdivision roads with prior NCDOT review and approval only require the developer's signature.
5. If submitted by the developer, encroachment agreements from all utilities located within the right of way shall be submitted with the petition for Road addition. However, construction plans may not be required at this time.
6. Submit to District Engineer's Office.

FOR NCDOT USE ONLY: Please check the appropriate block

☐ Rural Road ☐ Subdivision platted prior to October 1, 1975 ☐ Subdivision platted after September 30, 1975

REQUIREMENTS FOR ADDITION

If this road meets the requirements necessary for addition, we agree to grant the Department of Transportation a right-of-way of the necessary width to construct the road to the minimum construction standards of the NCDOT. The right-of-way will extend the entire length of the road that is requested to be added to the state maintained system and will include the necessary areas outside of the right-or-way for cut and fill slopes and drainage. Also, we agree to dedicate additional right-of-way at intersections for sight distance and design purposes and execute said right-of-way agreement forms that will be submitted to us by representatives of the NCDOT. The right-of-way shall be cleared at no expense to the NCDOT, which includes the removal of utilities, fences, other obstructions, etc.

General Statute 136-102.6 (see page 29 for Statute) states that any subdivision recorded on or after October 1, 1975, must be built in accordance with NCDOT standards in order to be eligible for addition to the State Road System.

ROAD NAME	HOMES	LENGTH	ROAD NAME	HOMES	LENGTH

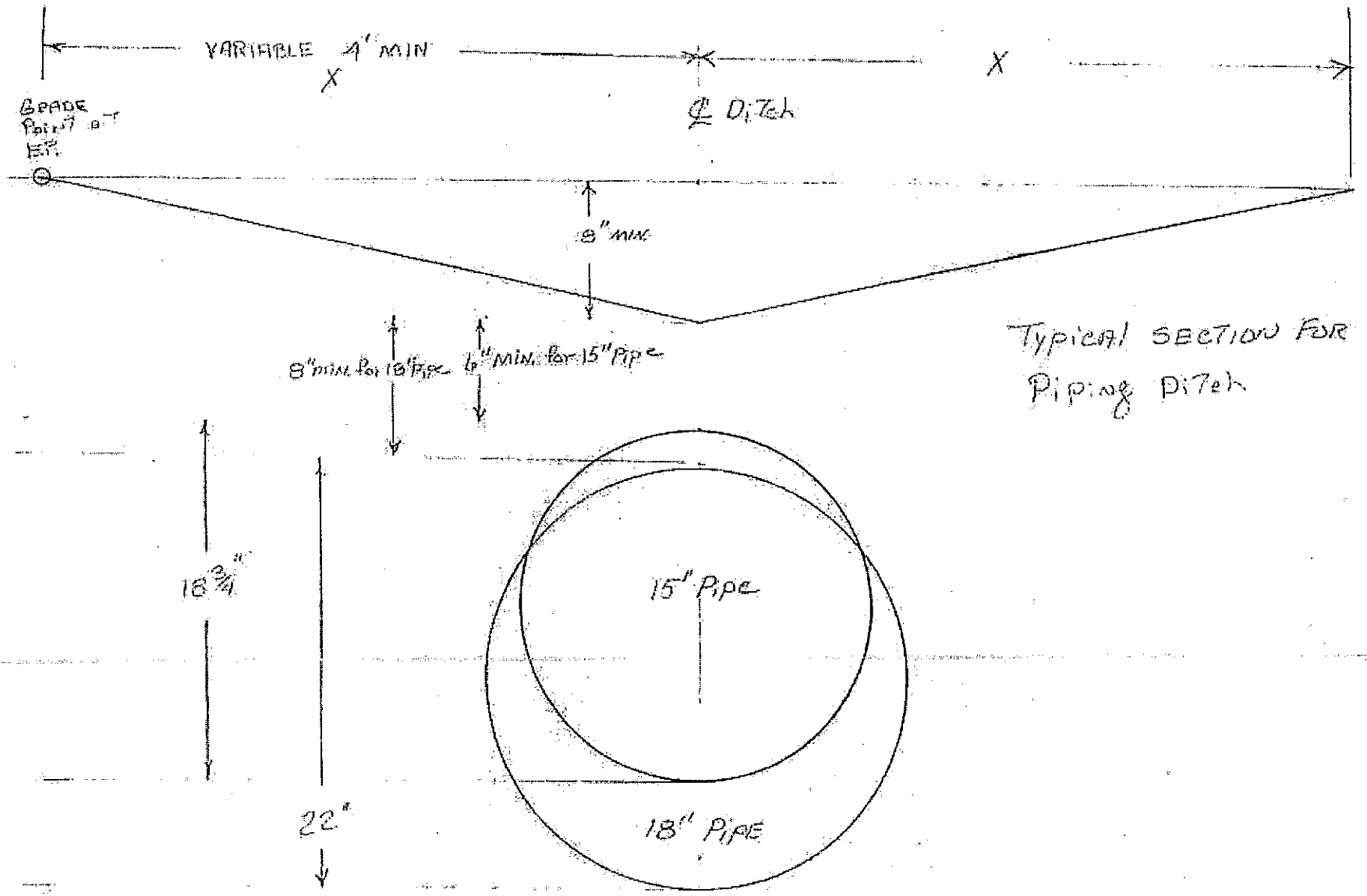

Typical SECTION FOR
Piping Ditch

POSSIBLE SUPPLIERS FOR
GRATES AND FRAMES

SOUTHERN FOUNDRY
P.O. BOX 186
APEX, N.C. 27502
(919) 362-7744

NORFOLK CAST, INC.
P.O. BOX 328
NORFOLK, VA. 23501

VULCAN FOUNDRY CORP.
P.O. BOX 905
DENHAM SPRINGS, LA.
1(800)626-4653

US FOUNDRY
8351 N. W.93RD ST
MEDLEY, FLA.33166
(305)885-0301 FAX (305) 844-3253

SUPER CAST, INC.
1104 US HWY. 117 BYPASS, S.
GOLDSBORO, N.C. 27530
(919)736-9010 FAX (919)736-0290

BUNCH PATTERN WORKS, INC.
P.O. BOX 267 HWY 308 N.
LEWISTON-WOODVILLE,N.C. 27849

CAPITAL FOUNDRY OF VIRGINIA, INC.
P.O. BOX 2212
VIRGINIA BEACH, VIRGINIA 23450

EMPORIA FOUNDRY, INC.
620 REESE STREET
EMPORIA, VIRGINIA 23847

ENNIS ENTERPRISES
P.O. BOX 931
WILMINGTON, N.C. 28402
(910) 371-9323

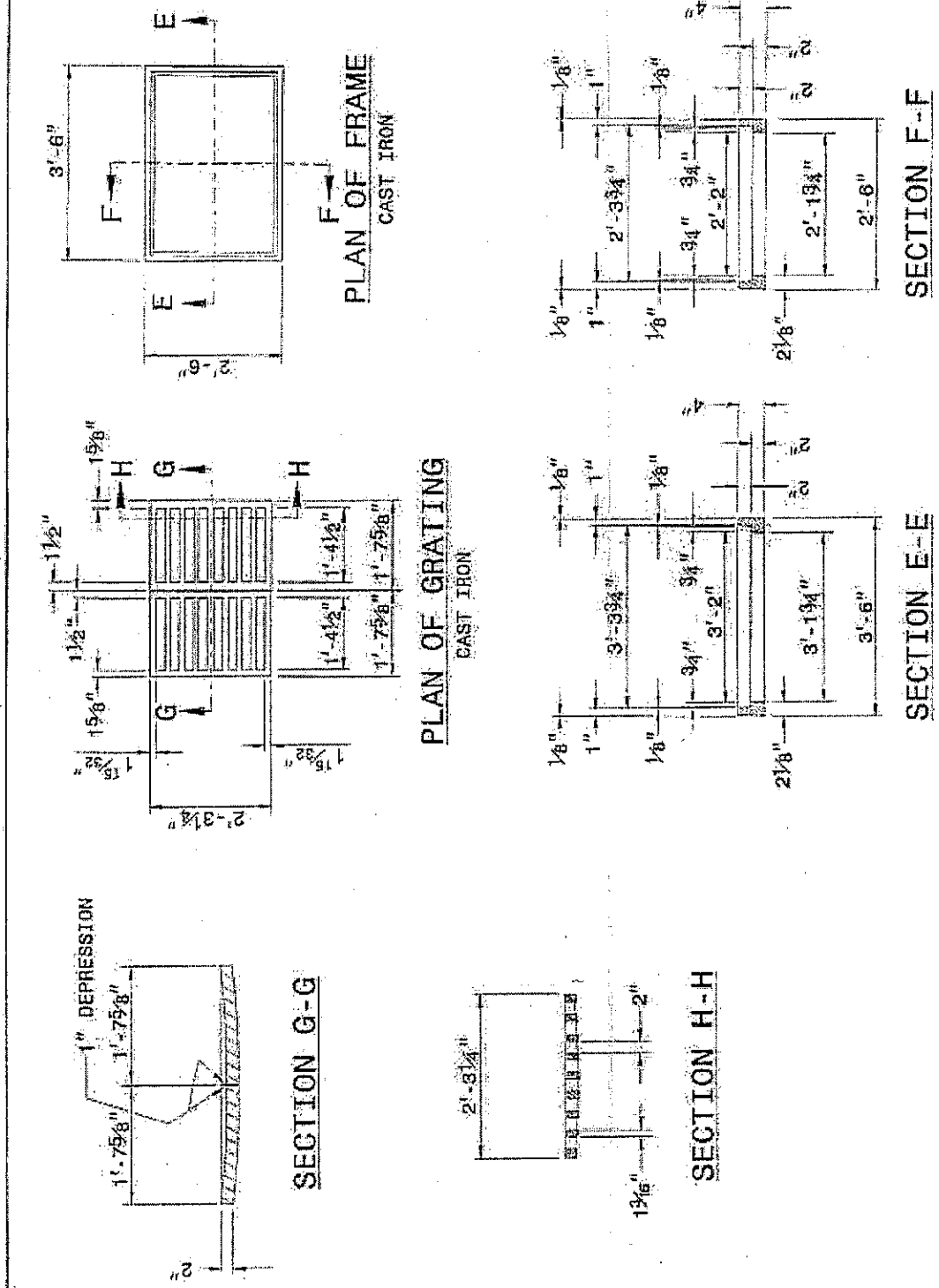

STATE OF NORTH CAROLINA
DEPT. OF TRANSPORTATION
DIVISION OF HIGHWAYS
RALEIGH, N.C.

7-06

ENGLISH STANDARD DRAWING FOR

DROP INLET FRAME AND GRATES

FOR USE WITH STD. DWG.S 840.14 AND 840.15

SHEET 1 OF 1

840.16

STATE OF NORTH CAROLINA
DEPT. OF TRANSPORTATION
DIVISION OF HIGHWAYS
RALEIGH, N.C.

7-06

ENGLISH STANDARD DRAWING FOR

DROP INLET FRAME AND GRATES

FOR USE WITH STD. DWG.S 840.14 AND 840.15

SHEET 1 OF 1

840.16

STATE OF
NORTH CAROLINA
DEPT. OF TRANSPORTATION
DIVISION OF HIGHWAYS
RALEIGH, N.C.

Z-06

ENGLISH STANDARD DRAWING FOR

DROP INLET FRAME AND GRATES

FOR USE WITH STD. DWG.S 840.14 AND 840.15

SHEET 1 OF 1

840.16

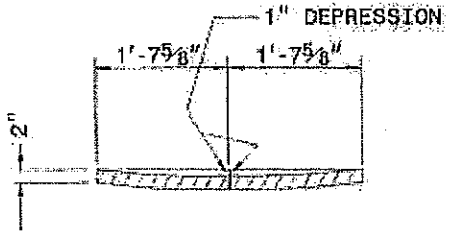

SECTION G-G

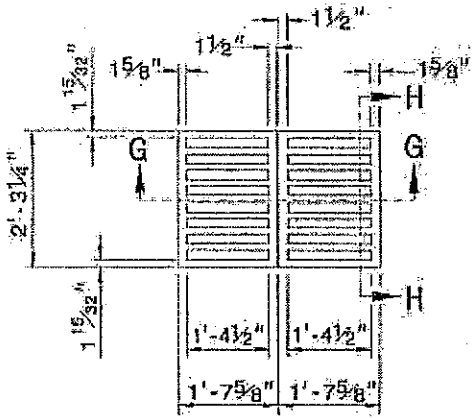

PLAN OF GRATING

CAST IRON

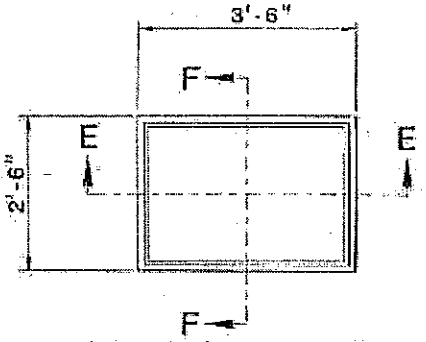

PLAN OF FRAME

CAST IRON

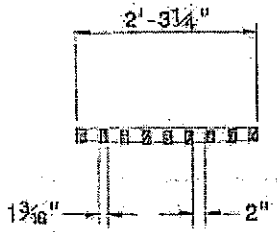

SECTION H-H

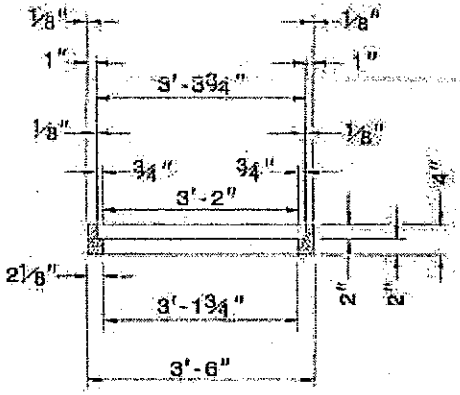

SECTION E-E

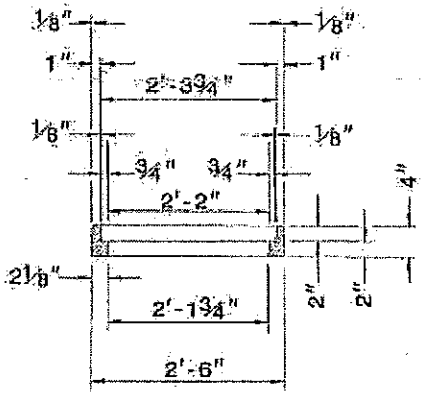

SECTION F-F

STATE OF
NORTH CAROLINA
DEPT. OF TRANSPORTATION
DIVISION OF HIGHWAYS
RALEIGH, N.C.

Z-06

ENGLISH STANDARD DRAWING FOR

DROP INLET FRAME AND GRATES

FOR USE WITH STD. DWG.S 840.14 AND 840.15

SHEET 1 OF 1

840.16

VERIFICATION OF COMPLIANCE WITH ENVIRONMENTAL REGULATIONS

(Check Appropriate Box)

☐ Permits from the N.C. Department of Environment and Natural Resources and the U.S. Army Corp of Engineers are not required for this project. However, all applicable federal and state regulations have been followed.

☐ The required permits from the N.C. Department of Environment and Natural Resources and the U.S. Army Corp of Engineers have been obtained for this project. Copies of permits and Completion Certificates are attached.

☐ All applicable NPDES Stormwater Permit requirements have been met for this project. (The applicant should contact the N.C. Division of Water Quality in Raleigh to determine if a stormwater permit is required.)

☐ The project is in compliance with all applicable sedimentation and erosion control laws and regulations.

Project Name: _____

Township: _____ County: _____

Project Engineer: _____ Phone No.: _____

Project Contact: _____

Applicants Name: _____ P.E. SEAL

Date Submitted: _____

(Reference Page 11, Item 10) 11/07/2003

ATTACHMENT "A"

Seeding and mulching shall be in accordance with Section 080 of the North Carolina Standard Specifications for Roads and Structures, except that Articles 080-0(B) shall not apply. Final determination of soil type shall be made by the Engineer. The following rates in pounds per acre shall apply:

SANDY SOIL	CLAY SOIL
50# - KY 31 Tall Fescue or Alta Tall Fescue	100# - KY 31 Tall Fescue or Alta Tall Fescue
5# - Centipede	15# - Kenblue Bluegrass
50# - Pensacola Bahiagrass	500# - Fertilizer
500# - Fertilizer	4000# - Limestone
4000# - Limestone	

Add 10# Kobe or Korean Lespedeza and 10# Millet to the above mixture from May 1 to August 31.

On cut and fill slopes 2:1 or steeper, add 30# Sericea Lespedeza from January 1 to December 31.

Fertilizer shall be 10-20-20 analysis. Upon written approval of the Engineer, a different analysis of fertilizer may be used provided the 1-2-2 ratio is maintained and the rate of application adjusted to provide the same amount of plant food as a 10-20-20 analysis.

STATE OF NORTH CAROLINA
DEPARTMENT OF TRANSPORTATION
DIVISION OF HIGHWAYS

MICHAEL F. EASLEY.
GOVERNOR

LYNDO TIPPETT
SECRETARY

October 30, 2006

Chatham County County Driveway Permit File Number 19-686

Subject: Commercial Driveway Permit Application with Entrance onto SR 1532
(Harrison Pond Subdivision)

Mr. Michael V Zaccardo
CE Group, Inc.
11000 Regency Parkway
Cary NC 27518

Dear Mr. Zaccardo:

Personnel assigned to this office have conducted a review of the permit Application and approval is granted subject to the following stipulations:

1. The entrance onto SR 1532 is to be constructed in accordance with the attached detail sheet.

2. The entrances onto SR 1532 shall be paved for at least 50' along the centerline of the entrance.

3. The entrance onto SR 1532 shall require radii on each side of the driveway as shown on the attached drawing.

4. No parking or outdoor advertising (signs) shall be allowed inside the right of way of SR 1532.

5. Any areas inside the right of way disturbed during construction shall be seeded and mulched immediately upon completion of construction.

6. Upon completion of construction, final approval by the District Engineer is required prior to opening the access connection for public use (page 9 Driveway Manual).

Attached to this correspondence please find an approved copy of TEB Form 65-04 (Driveway Permit Application - N. C. Department of Transportation). Upon completion of the driveway entrance construction please notify the Chatham County Maintenance Department (Phone 919-742-3431) so a final inspection of the entrance can be made.

Yours very truly,

R. E. Blakley (REK)

R. E. Blakley, PE
District Engineer

REB/jek

Attachments

Cc: Mr. Timothy Johnson, PE, Division Engineer
Mr. B.F. Sloan, County Maintenance Engineer, Chatham County
File

P.O. BOX 1164, ASHEBORO, NORTH CAROLINA 27204
PHONE (336) 629-1423 FAX (336)629-7228

APPLICATION IDENTIFICATION		N.C. DEPARTMENT OF TRANSPORTATION
Driveway Permit No. 19-6860	Date of Application 10-30-06	STREET AND DRIVEWAY ACCESS PERMIT APPLICATION
County: Chatham		
Development Name: Harrison Pond		

LOCATION OF PROPERTY

Route/Road: SR 1532, River Forest Road

Exact Distance 1,800 ☐ Miles ☒ Feet N ☐ S ☐ E ☐ W ☒

From the Intersection of Route No. SR 1532 and Route No. SR 1525 Toward Haw River

Property Will Be Used For: ☒ Residential /Subdivision ☐ Commercial ☐ Educational Facilities ☐ TND ☐ Emergency Services ☐ Other

Property: ☐ is ☒ is not within any City Zoning Area.

AGREEMENT

- I, the undersigned property owner, request access and permission to construct driveway(s) or street(s) on public right-of-way at the above location.
- I agree to construct and maintain driveway(s) or street entrance(s) in absolute conformance with the current "Policy on Street and Driveway Access to North Carolina Highways" as adopted by the North Carolina Department of Transportation.
- I agree that no signs or objects will be placed on or over the public right-of-way other than those approved by NCDOT.
- I agree that the driveway(s) or street(s) will be constructed as shown on the attached plans.
- I agree that that driveway(s) or street(s) as used in this agreement include any approach tapers, storage lanes or speed change lanes as deemed necessary.
- I agree that if any future improvements to the roadway become necessary, the portion of driveway(s) or street(s) located on public right-of-way will be considered the property of the North Carolina Department of Transportation, and I will not be entitled to reimbursement or have any claim for present expenditures for driveway or street construction.
- I agree that this permit becomes void if construction of driveway(s) or street(s) is not completed within the time specified by the "Policy on Street and Driveway Access to North Carolina Highways".
- I agree to pay a $50 construction inspection fee. Make checks payable to NCDOT. This fee will be reimbursed if application is denied.
- I agree to construct and maintain the driveway(s) or street(s) in a safe manner so as not to interfere with or endanger the public travel.
- I agree to provide during construction proper signs, signal lights, flaggers and other warning devices for the protection of traffic in conformance with the current "Manual on Uniform Traffic Control Devices for Streets and Highways" and Amendments or Supplements thereto. Information as to the above rules and regulations may be obtained from the District Engineer.
- I agree to indemnify and save harmless the North Carolina Department of Transportation from all damages and claims for damage that may arise by reason of this construction.
- I agree that the North Carolina Department of Transportation will assume no responsibility for any damages that may be caused to such facilities, within the highway right-of-way limits, in carrying out its construction.
- I agree to provide a Performance and Indemnity Bond in the amount specified by the Division of Highways for any construction proposed on the State Highway system.
- The granting of this permit is subject to the regulatory powers of the NC Department of Transportation as provided by law and as set forth in the N.C. Policy on Driveways and shall not be construed as a contract access point.
- **I AGREE TO NOTIFY THE DISTRICT ENGINEER WHEN THE PROPOSED WORK BEGINS AND WHEN IT IS COMPLETED.**

RECEIVED
OCT 0 2 2006
DIVISION 8 DISTRICT 1
DEPT. OF TRANSPORTATION

2004-01 NOTE: Submit Four Copies of Application to Local District Engineer, N.C. Department of Transportation TEB 65-04rev.
61-03419

SIGNATURES OF APPLICANT

PROPERTY OWNER (APPLICANT)		WITNESS	
COMPANY	Harrison Pond, LLC	NAME	Janice B. Saunders
SIGNATURE	Nicholas P. Kenner, Mgr.	SIGNATURE	Janice B. Saunders
ADDRESS	P.O. Box 607	ADDRESS	P.O. Box 607
	Pittsboro, NC 27312 Phone No. 9198809542		Pittsboro, NC 27312

AUTHORIZED AGENT		WITNESS	
COMPANY	CE Group, Inc - Michael V. Zaccardo	NAME	R. Stephen Rambeau, Jr.
SIGNATURE		SIGNATURE	
ADDRESS	11000 Regency Parkway	ADDRESS	11000 Regency Parkway
	Cary, NC 27518 Phone No. 9193678790		Cary, NC 27518

APPROVALS

APPLICATION RECEIVED BY DISTRICT ENGINEER

R E Blakley (BEX) — 10-2-06

SIGNATURE — DATE

APPLICATION APPROVED BY LOCAL GOVERNMENTAL AUTHORITY (when required)

SIGNATURE — TITLE — DATE

APPLICATION APPROVED BY DISTRICT ENGINEER

R. E. Blakley (BEX) — 10-30-06

SIGNATURE — DATE

INSPECTION BY NCDOT

SIGNATURE — TITLE — DATE

COMMENTS:
Public roadway entrance for 42 Lot Single Family Subdivision

RECEIVED
OCT 0 2 2006
DIVISION 8 DISTRICT 1
DEPT OF TRANSPORTATION

CHATHAM COUNTY PUBLIC HEALTH DEPARTMENT
Division of Environmental Health
Soil Erosion and Sedimentation Control

January 12, 2007

LETTER OF APPROVAL

Harrison Pond, LLC
Attn: Nicolas P. Robinson
P.O. Box 607
Pittsboro, NC 27312

RE: Project Name: Harrison Pond
Project Number: 2006-075
Acres approved: 10.6
Total Acres: 74.242
Submitted By: CE Group, Inc.
Date Received: January 9, 2007

Dear Sir or Madam:

This office has reviewed the subject erosion and sedimentation control plan. We find the plan to be acceptable and hereby issue this Letter of Approval. The enclosed Certificate of Approval must be posted at the job site. This plan approval shall expire two (2) years following the date of approval, if no land-disturbing activity has been undertaken.

Section 6 (I) of the Chatham County Sedimentation and Erosion Control Ordinance requires that a copy of the approved erosion control plan be on file at the job site. Also, this letter gives the notice required by G.S. 113A-61.1(a) of our right of periodic inspection to insure compliance with the approved plan.

North Carolina's Sedimentation Pollution Control Act is performance-oriented, requiring protection of existing natural resources and adjoining properties. If, following the commencement of this project, the erosion and sedimentation control plan is inadequate to meet the requirements of the Chatham County Sedimentation and Erosion Control

Holly Coleman, R.S.
Interim Public Health Director
80 East Street, PO Box 130, Pittsboro, NC 27312 *Phone: 919-542-8208 Fax: 919-542-8288*

Ordinance, this office may require revisions to the plan and implementation of the revisions to insure compliance with the Act.

Acceptance and approval of this plan is conditioned upon your compliance with Federal and State water quality laws, regulations, and rules. In addition, local city or county ordinances or rules may also apply to this land-disturbing activity. This approval does not supersede any other permit or approval.

Please be aware that your project will be covered by the enclosed NPDES General Stormwater Permit NCGO1000 (Construction Activities). You should first become familiar with all of the requirements for compliance with the enclosed general permit.

Please note that this approval is based in part on the accuracy of the information provided in the Financial Responsibility Form, which you provided. You are requested to file an amended form if there is any change in the information included on the form. Please notify us when you would like to schedule a preconstruction conference. Notification shall be given at least 7 days prior to initiation of activity.

Your cooperation is appreciated.

PLEASE NOTE
The Land Disturbing fee must be submitted to our office prior to land disturbing activity can begin.

Sincerely,

Jim Willis, Erosion Control Officer
Environmental Health - SESC

80 East Street, PO Box 130, Pittsboro, NC 27312 *Phone: 919-542-8208 Fax: 919-542-8288*

ROBIN MAYCOCK LITTLE
5409 NEW REBEL COURT, YOUNGSVILLE, NC 27596
(919) 418-SOIL

July 6, 2006

Nick Robinson
Harrison Pond LLC
PO Box 607
Pittsboro, NC 27312

Subject: Wetland and stream evaluation for Harbison Farm, +/- 74 ac., located at 538 River Forest Road (SR 1532) approximately 0.1 mile west of intersection with Hamlets Chapel Road (SR 1525) on north side of road. PIN 9754 00 09 6227.

Dear Mr. Robinson:

On June 9, 2006, you contracted my services as an environmental consultant to delineate any jurisdictional wetlands or waters on the subject property. On June 11, 2006, I conducted field surveys of the subject property, and completed wetland data forms and stream identification checklists. (See attached forms.) Using the wetland delineation procedure described in the 1987 U.S. Army Corps of Engineers (COE) Wetland Delineation Manual and the methodology of the N.C. Department of Natural Resources, Division of Water Quality (DWQ) Stream Identification Manual, I examined three ponds and their outlet channels. The remainder of the subject property is uplands, in mature mixed hardwood and pine forest.

General Information

The subject property consists of approximately 74 acres of pasture and forested land. It is located approximately 2.5 miles north of NC 15/501, to the east of the Haw River. The subject property is more specifically located at 538 River Forest Road (SR 1532), 0.1 miles west of the intersection of SR 1532 with SR 1525 (Hamlet Chapel Road). It is also shown on the Bynum USGS Topographic quadrangle map, at approximate latitude of 35.808°N, longitude of 79.1672°W. It is located in the Cape Fear River basin, and drains to Wilkinson Creek and then to the Haw River. Wilkinson Creek is classified by DWQ as WS IV, NSW, 16-35. The Chatham County Soil Survey is unpublished, but the field sheets for the subject property show it mapped as primarily Georgeville and Helena soil series.

Jurisdictional Areas

The three ponds are arbitrarily labeled as Pond A, B and C. Pond A is located on the west side of the subject property, nearest to the existing single family dwelling, in about the middle of the property. No wetlands were found in the vicinity of the pond and the outlet channel has been deepened and straightened all the way to the road. This channelization probably occurred at least ten years ago as evidenced by the age of the trees on the spoil piles or berm adjacent to the channel. There was no water in the channel, and hydric soil conditions were not observed until approximately 100 feet north of River Forest Road (SR 1532). The channel is marginally jurisdictional, but will be protected as a storm water outlet for the pond with a vegetated buffer 50 feet from ordinary high water level of the stream and pond. The pond is considered jurisdictional, although the drought conditions at the time of evaluation result in it being hydrologically isolated waters.

Pond B is located on the southeast side of the subject property, nearest to River Forest Road (SR 1532). No wetlands were found in the vicinity of the pond and the outlet channel has been deepened and straightened all the way to the road. The entire channel was found to be jurisdictional although there was very little water observed due to drought conditions. The channel will also be protected as a storm water outlet for the pond with a vegetated buffer 50 feet from ordinary high water level of the stream and pond. The pond is considered jurisdictional, and is hydrologically connected by the channel to downstream waters.

Pond C is located in the northwest corner of the property. It is significantly smaller the Pond A or B, and no water was observed in the pond. While the soils were mottled, there were no hydrologic indicators to qualify it as a jurisdictional water or wetland. There was no outlet observed, and it appears to have been dug in uplands, in the head of a drainage way. No hydrological connection was observed.

Since the COE does not have authority to regulate isolated waters, only DWQ would require notification if the pond were to be drained or filled or altered in any way. No buffer authorization is currently required in the Cape Fear River Basin. Nationwide Permit #39 and DWQ General Certification 32362 for Residential, Commercial and Institutional Developments, would apply if any impacts to the ponds or outlet channels were anticipated. Permanent or temporary impacts would be totaled for the entire property and calculated as area for the pond or linear feet for the streams and as acres or square feet for any wetland impacts. Impacts greater than 1/3 acre or 14,250 square feet would require written notification to and approval by DWQ prior to start of work.

It is my understanding from your engineer, Mr. Mark Ashness, PE, ASLA, of the CE Group, Inc. that you intend to protect the blueline outlet channels on all three ponds with a permanent 50 foot wooded buffer on both sides of the channels. No impacts by roads, driveways, or utilities are anticipated to the wetlands, ponds, or to any blueline streams on the subject property, and therefore, no written notification will be required to the COE or DWQ. You may submit a courtesy notification to show that no impacts are planned, but it is not required. You may want to put the buffered areas into a permanent easement in order to protect them in the future.

I hope that this information fulfills your needs with regards to the development of the subject property. If any other environmental issues arise during development, please do not hesitate to contact me at (919) 418 -7645. I look forward to working with you again in the future.

Sincerely,

Robin Maycock Little

Robin Maycock Little
Licensed Soil Scientist #1205

DATA FORM
ROUTINE WETLAND DETERMINATION
(1987 COE Wetlands Determination Manual)

Project / Site: Harrison Pond Subdivision Applicant / Owner: Harrison Pond LLC/Nick Robinson Investigator: Robin Maycock Little_____	Date: 06/11/06 County: Chatham State: NC
Do normal circumstances exist on the site? Yes ☒ No ☐ Is the site significantly disturbed (Atypical situation)? Yes ☐ No ☒ Is the area a potential problem area? Yes ☐ No ☒ (explain on reverse if needed)	Community ID: Transect ID: Plot ID: 1

VEGETATION

Dominant Plant Species	Indicator	Stratum	Dominant Plant Species	Indicator	Stratum
1. *Platanus occidentalis*	FACW-	O	9.		
2. *Acer rubrum*	FAC	O	10.		
3. *Quercus phellos*	FACW-	O	11.		
4. *Microstegium vimineum*	FAC+	H	12.		
5. *Betula nigra*	FACW	u	13.		
6.			14.		
7.			15.		
8.			16.		

Percent of Dominant Species that are OBL, FACW, or FAC excluding FAC-). 100%

Remarks:
Meets FAC-Neutral test in channel/depressional area

HYDROLOGY

☒ Recorded Data (Describe In Remarks):
- ☐ Stream, Lake, or Tide Gauge
- ☐ Aerial Photographs
- ☐ Other

☐ No Recorded Data Available

Field Observations:

Depth of Surface Water: _____(in.)

Depth to Free Water in Pit: _____ (in.)

Depth to Saturated Soil: >12 (in.)

Wetland Hydrology Indicators

Primary Indicators:
- ☐ Inundated
- ☐ Saturated in Upper 12"
- ☐ Water Marks
- ☐ Drift Lines
- ☐ Sediment Deposits
- ☐ Drainage Patterns in Wetlands

Secondary Indicators:
- ☒ Oxidized Roots Channels in Upper 12"
- ☐ Water-Stained Leaves
- ☐ Local Soil Survey Data
- ☒ FAC-Neutral Test
- ☐ Other (Explain in Remarks)

Remarks:
Has two secondary hydrologic indicators; drought conditions; mapped at topographic break, at edge of outlet channel/stream.

SOILS

1

Map Unit Name
(Series and Phase): _____ Drainage Class: _____

Taxonomy (Subgroup): _____ Confirm Mapped Type? Yes ☐ No ☐

Profile Description:

Depth (inches)	Horizon	Matrix Colors (Munsell Moist)	Mottle Colors (Munsell Moist)	Mottle Abundance/Contrast	Texture, Concretions, Structure, etc.
0 - 8	A	7.5 YR 5/3, 6/3	5YR 4/6	30%, distinct, common	loam
8 – 13	AB	7.5 YR 5/4	5YR 4/6	30%, distinct	clay loam
				/	
				/	
				/	
				/	
				/	
				/	

Hydric Soil Indicators:

- ☐ Histosol
- ☐ Histic Epipedon
- ☐ Sulfidic Odor
- ☐ Aquic Moisture Regime
- ☒ Reducing Conditions
- ☐ Gleyed or Low-Chroma Colors
- ☐ Concretions
- ☐ High Organic Content in Surface Layer in Sandy Soils
- ☐ Organic Streaking in Sandy Soils
- ☐ Listed On Local Hydric Soils List
- ☐ Listed on National Hydric Soils List
- ☐ Other (Explain in Remarks)

Remarks:
Meets Hydrologic Indicators F8 and F3 – somewhat closed depression due to culvert inlet elevation at road (NS f(2))

WETLAND DETERMINATION

Hydrophytic Vegetation Present? Yes ☒ No ☐
Wetland Hydrology Present? Yes ☒ No ☐
Hydric Soils Present? Yes ☒ No ☐

Is the Sampling Point Within a Wetland? Yes ☒ No ☐

Remarks: Wetland exists below outlet channel to pond/disturbed stream channel.

PHOTO / USGS / NRCS

DATA FORM
ROUTINE WETLAND DETERMINATION
(1987 COE Wetlands Determination Manual)

Project / Site: Harrison Pond Subdivision Applicant / Owner: Harrison Pond LLC/Nick Robinson Investigator: Robin Maycock Little_____	Date: 06/11/06 County: Chatham State: NC
Do normal circumstances exist on the site? Yes ☒ No ☐ Is the site significantly disturbed (Atypical situation)? Yes ☐ No ☒ Is the area a potential problem area? Yes ☐ No ☒ (explain on reverse if needed)	Community ID: Transect ID: Plot ID: 2

VEGETATION

Dominant Plant Species	Indicator	Stratum	Dominant Plant Species	Indicator	Stratum
1. *Gleditsia triacanthos*	*FACU*	*O*	9.		
2. *Acer rubrum*	*FAC*	*O*	10.		
3. *Vitis spp.*	*FACW – UPL*	*V*	11.		
4. *Rubus spp*	*UPL*	*V*	12.		
5.			13.		
6.			14.		
7.			15.		
8.			16.		

Percent of Dominant Species that are OBL, FACW, or FAC excluding FAC-). 25%

Remarks:
Does not meet FAC-Neutral test above topo break, outside of channel.

HYDROLOGY

☒ Recorded Data (Describe In Remarks):
- ☐ Stream, Lake, or Tide Gauge
- ☐ Aerial Photographs
- ☐ Other

☐ No Recorded Data Available

Field Observations:

Depth of Surface Water: _____(in.)

Depth to Free Water in Pit: _____ (in.)

Depth to Saturated Soil: ≥12 (in.)

Wetland Hydrology Indicators

Primary Indicators:
- ☐ Inundated
- ☐ Saturated in Upper 12"
- ☐ Water Marks
- ☐ Drift Lines
- ☐ Sediment Deposits
- ☐ Drainage Patterns in Wetlands

Secondary Indicators:
- ☐ Oxidized Roots Channels in Upper 12"
- ☐ Water-Stained Leaves
- ☐ Local Soil Survey Data
- ☐ FAC-Neutral Test
- ☐ Other (Explain in Remarks)

Remarks:
No hydrologic indicators present.

SOILS

Map Unit Name
(Series and Phase): _____ Drainage Class: _____

Taxonomy (Subgroup): _____ Confirm Mapped Type? Yes ☐ No ☐

Profile Description:

Depth (inches)	Horizon	Matrix Colors (Munsell Moist)	Mottle Colors (Munsell Moist)	Mottle Abundance/Contrast	Texture, Concretions, Structure, etc.
0 - 8	A	7.5 YR 5/3, 6/3			loam
8 – 15	B	7.5 YR 5/4			clay loam
				/	
				/	
				/	
				/	
				/	
				/	

Hydric Soil Indicators:

- ☐ Histosol
- ☐ Histic Epipedon
- ☐ Sulfidic Odor
- ☐ Aquic Moisture Regime
- ☐ Reducing Conditions
- ☐ Gleyed or Low-Chroma Colors
- ☐ Concretions
- ☐ High Organic Content in Surface Layer in Sandy Soils
- ☐ Organic Streaking in Sandy Soils
- ☐ Listed On Local Hydric Soils List
- ☐ Listed on National Hydric Soils List
- ☐ Other (Explain in Remarks)

Remarks:
Does not meet any Hydrologic indicators/ not hydric

WETLAND DETERMINATION

Hydrophytic Vegetation Present?	Yes ☐	No ☒
Wetland Hydrology Present?	Yes ☐	No ☒
Hydric Soils Present?	Yes ☐	No ☒
Is the Sampling Point Within a Wetland?	Yes ☐	No ☒

Remarks: Uplands surround channel and pond.

PHOTO / USGS / NRCS

DATA FORM
ROUTINE WETLAND DETERMINATION
(1987 COE Wetlands Determination Manual)

Project / Site: Harbison Farm Applicant / Owner: Investigator: Robin Maycock Little_____	Date: 6/11/06 County: Chatham State: NC
Do normal circumstances exist on the site? Yes ☐ No ☒ Is the site significantly disturbed (Atypical situation)? Yes ☐ No ☒ Is the area a potential problem area? Yes ☐ No ☒ (explain on reverse if needed)	Community ID: Transect ID: Plot ID: 3

VEGETATION

Dominant Plant Species	Indicator	Stratum	Dominant Plant Species	Indicator	Stratum
1. *Liquidambar styraciflua*	FAC	O	9.		
2. *Microstegium spp.*	FAC	H	10.		
3. *Pinus taeda*	FAC	O	11.		
4.			12.		
5.			13.		
6.			14.		
7.			15.		
8.			16.		

Percent of Dominant Species that are OBL, FACW, or FAC excluding FAC-). 100%

Remarks:

HYDROLOGY

☐ Recorded Data (Describe in Remarks):
- ☐ Stream, Lake, or Tide Gauge
- ☐ Aerial Photographs
- ☐ Other

☒ No Recorded Data Available

Field Observations:

Depth of Surface Water: 0 (in.)

Depth to Free Water in Pit: 0 (in.)

Depth to Saturated Soil: >12 (in.)

Wetland Hydrology Indicators

Primary Indicators:
- ☐ Inundated
- ☐ Saturated in Upper 12"
- ☐ Water Marks
- ☐ Drift Lines
- ☐ Sediment Deposits
- ☐ Drainage Patterns in Wetlands

Secondary Indicators:
- ☐ Oxidized Roots Channels in Upper 12"
- ☐ Water-Stained Leaves
- ☐ Local Soil Survey Data
- ☒ FAC-Neutral Test
- ☐ Other (Explain in Remarks)

Remarks:
Old dug pond with no apparent outlet or inlet, no water, no hydric soil, surrounded by uplands in head of drainage way.

SOILS

3

Map Unit Name
(Series and Phase): Lignum 2 – 6%

Drainage Class: moderately well drained

Taxonomy (Subgroup): Aquic hapludult

Confirm Mapped Type? Yes ☒ No ☐

Profile Description:

Depth (inches)	Horizon	Matrix Colors (Munsell Moist)	Mottle Colors (Munsell Moist)	Mottle Abundance/Contrast	Texture, Concretions, Structure, etc.
0 – 12	B	7.5YR 5/6	10YR 7/2	20%/ strong	clay
				/	
				/	
				/	
				/	
				/	
				/	
				/	

Hydric Soil Indicators:

- ☐ Histosol
- ☐ Histic Epipedon
- ☐ Sulfidic Odor
- ☒ Aquic Moisture Regime
- ☐ Reducing Conditions
- ☒ Gleyed or Low-Chroma Colors
- ☐ Concretions
- ☐ High Organic Content in Surface Layer in Sandy Soils
- ☐ Organic Streaking in Sandy Soils
- ☐ Listed On Local Hydric Soils List
- ☐ Listed on National Hydric Soils List
- ☐ Other (Explain in Remarks)

Remarks:
Does not meet F3 or F8 Hydric Soil Indicators

WETLAND DETERMINATION

Hydrophytic Vegetation Present? Yes ☒ No ☐
Wetland Hydrology Present? Yes ☐ No ☒
Hydric Soils Present? Yes ☐ No ☒

Is the Sampling Point Within a Wetland? Yes ☐ No ☒

Remarks:
Small dry dug pond site, < 4000 sq. ft.

PHOTO / USGS / NRCS

Project Name: HARRISON POND | River Basin: WILKINSON CREEK → CAPE FEAR | County: Chatham | Evaluator: RMWitte

PWQ Project Number: | Nearest Named Stream: UT TO HAW RIVER | Latitude: 35.808N | Signature: RMWitte

Date: 6/11/06 | USGS QUAD: BYNUM | Longitude: 79.1672W | Location/Directions:

PLEASE NOTE: *If evaluator and landowner agree that the feature is a man-made ditch, then use of this form is not necessary. Also, if in the best professional judgement of the evaluator, the feature is a man-made ditch and not a modified natural stream-this rating system should not be used**

PRIMARY FIELD INDICATORS: (Circle One Number Per Line)

A. Geomorphology	Absent	Weak	Moderate	Strong
(1) Is there a Riffle-Pool Sequence?	0	1	2	3
(2) Is the USDA texture in Streambed different from surrounding terrain?	0	1	2	3
(3) Are natural Levees present?	0	1	2	3
(4) Is the Channel Sinuous?	0	1	2	3
(5) Is there an active (or relic) Floodplain Present?	0	1	2	3
(6) Is the channel Braided?	0	1	2	3
(7) Are recent alluvial deposits present?	0	1	2	3
(8) Is there a bankful bench presnet?	0	1	2	3
(9) Is a continuous Bed & Bank present?	0	1	2	3

*NOTE: If Bed & Bank Caused By Ditching And WITHOUT Sinuosity Then Score=0**

(10) Is a 2nd order or greater channel (as indicated on Topo map *and/or* in field) present? Yes=3 No=0

PRIMARY GEOMORPHOLOGY INDICATOR POINTS: 1

I. Hydrology	Absent	Weak	Moderate	Strong
(1) Is there a groundwater flow/discharge Present?	0	1	2	3

PRIMARY HYDROLOGY INDICATOR POINTS: 0

II. Biology	Absent	Weak	Moderate	Strong
(1) Are fibrous roots present in streambed?	3	2	1	0
(2) Are rooted plants present in streambed?	3	2	1	0
(3) Is periphyion present? Algae on rocks under water?	0	1	2	3
(4) Are bivalves present?	0	1	2	3

PRIMARY BIOLOGY INDICATOR POINTS: 3

SECONDARY FIELD INDICATORS: (Circle one number per line)

B. Geomorphology	Absent	Weak	Moderate	Strong
(1) Is there a head cut present in channel?	0	.5	1	1.5
(2) Is there a grade control point in channel?	0	.5	1	1.5
(3) Does topography indicate a natural drainage way?	0	.5	1	1.5

SECONDARY GEOMORPHOLOGY POINTS: .5

I. Hydrology	Absent	Weak	Moderate	Strong
(1) Is this year's (or last's) leaflitter Present in streambed?	1.5	1	.5	0
(2) Is sediment on plants (or debris) present?	0	.5	1	1.5
(3) Are wrack lines present?	0	.5	1	1.5
(4) Is water in channel and>48 hrs. since Last known rain? (*Note: *If ditch indicated in #9 above skip this step and #5 below**)	0	.5	1	1.5
(5) Is there water in channel during dry conditions OR in growing season?	0	.5	1	1.5

(6) Are hydric soils present in sides of channel (or in headcut)? Yes=1.5 No=0

SECONDARY HYDROLOGY INDICATOR POINTS: .5

II. Biology	Absent	Weak	Moderate	Strong
(1) Are fish present?	0	.5	1	1.5
(2) Are amphibians present?	0	.5	1	1.5
(3) Are aquatic turtles present?	0	.5	1	1.5
(4) Are crayfish present?	0	.5	1	1.5
(5) Are Macrobenthos present?	0	.5	1	1.5
(6) Are iron oxidizing bacteria/fungus present?	0	.5	1	1.5
(7) Is filamentous algae present?	0	.5	1	1.5

(8) Are wetland plants in streambed?	SAV	Mostly OBL	Mostly FACW	Mostly FAC	Mostly FACU	Mostly UPL
*NOTE: *If total absence of all plants in streambed is noted above skip this step UNLESS SAV present*	2	1	.75	.5	0	0

SECONDARY BIOLOGY INDICATOR POINTS: .5

TOTAL POINTS (Primary + Secondary)= 6.5 (*If greater than or equal to 19 points the stream is at least intermittent*)

channelized stream channel below pond to culvert at road, straight, no water (drought conditions) berm to one side,

TopoZone - The Web's Topographic Map

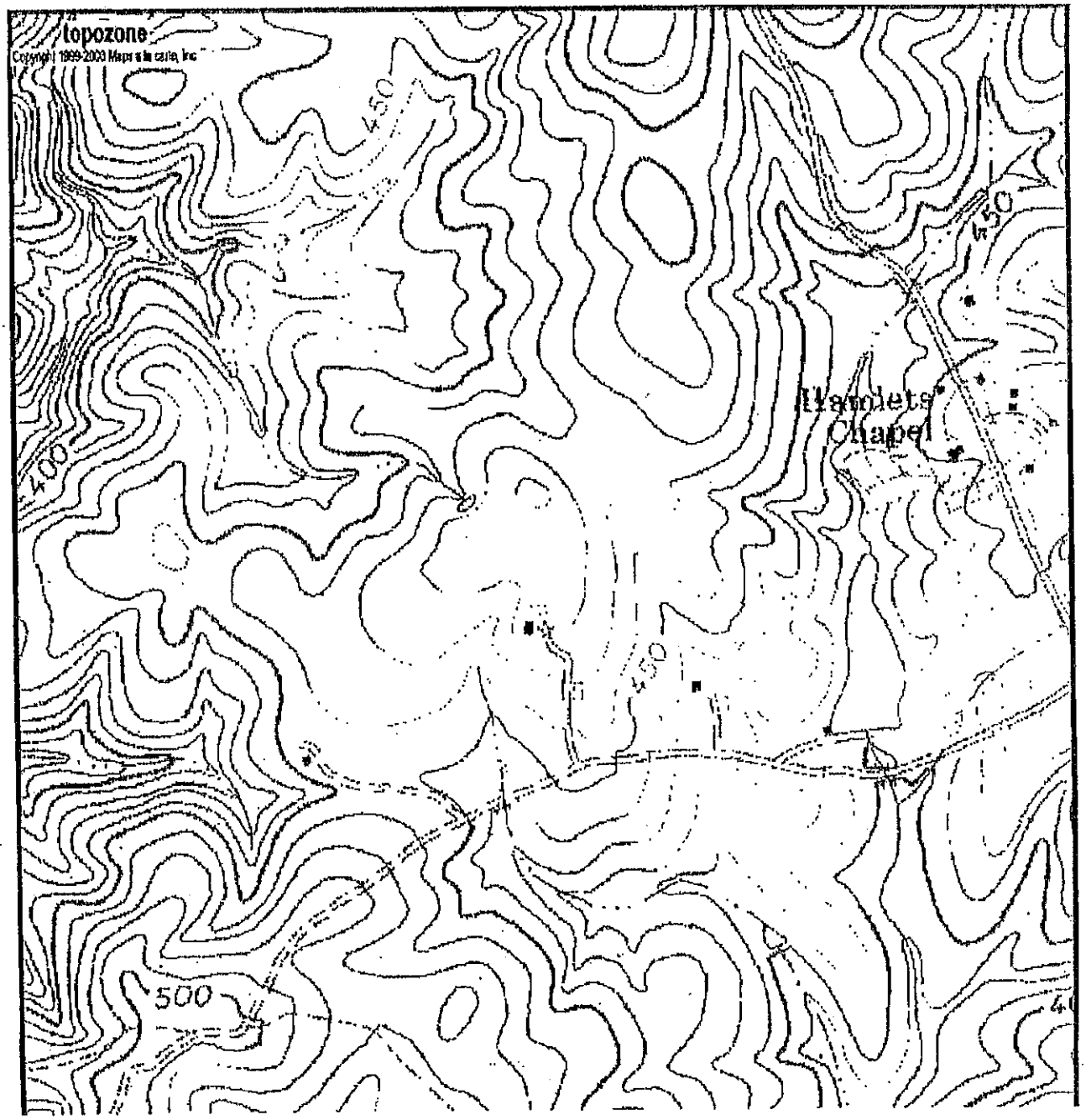

http://www.topozone.com/print.asp?z=17&n=3964247&e=665596&s=24&size=l&u=5&datum=nad83

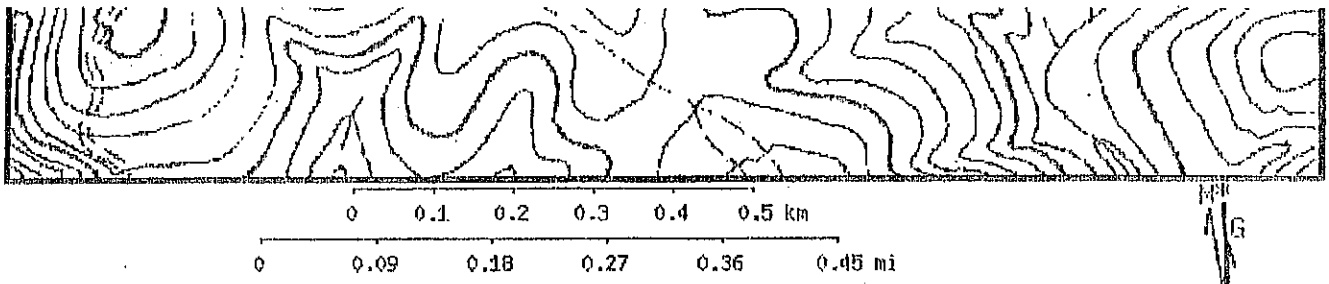

Map center is 35.8084°N, 79.1672°W (WGS84/NAD83)
Bynum quadrangle
Projection is UTM Zone 17 NAD83 Datum

JPEG image 1056x816 pixels

This Survey is of an existing natural feature, such as a watercourse or wetland.

Van R. Finch — Surveyor

12-4-06 — Date

This certifies that this copy of this plat accurately depicts the boundary of the jurisdiction of Section 404 of the Clean Water Act as determined by the undersigned on this date. Unless there is a change in law or our published regulations, this determination of Section 404 Jurisdiction may be relied upon for a period not to exceed five years from this date. This determination was made utilizing the 1987 Corps of Engineers Wetlands Delineation Manual.

Name _____

Title _____

Date _____

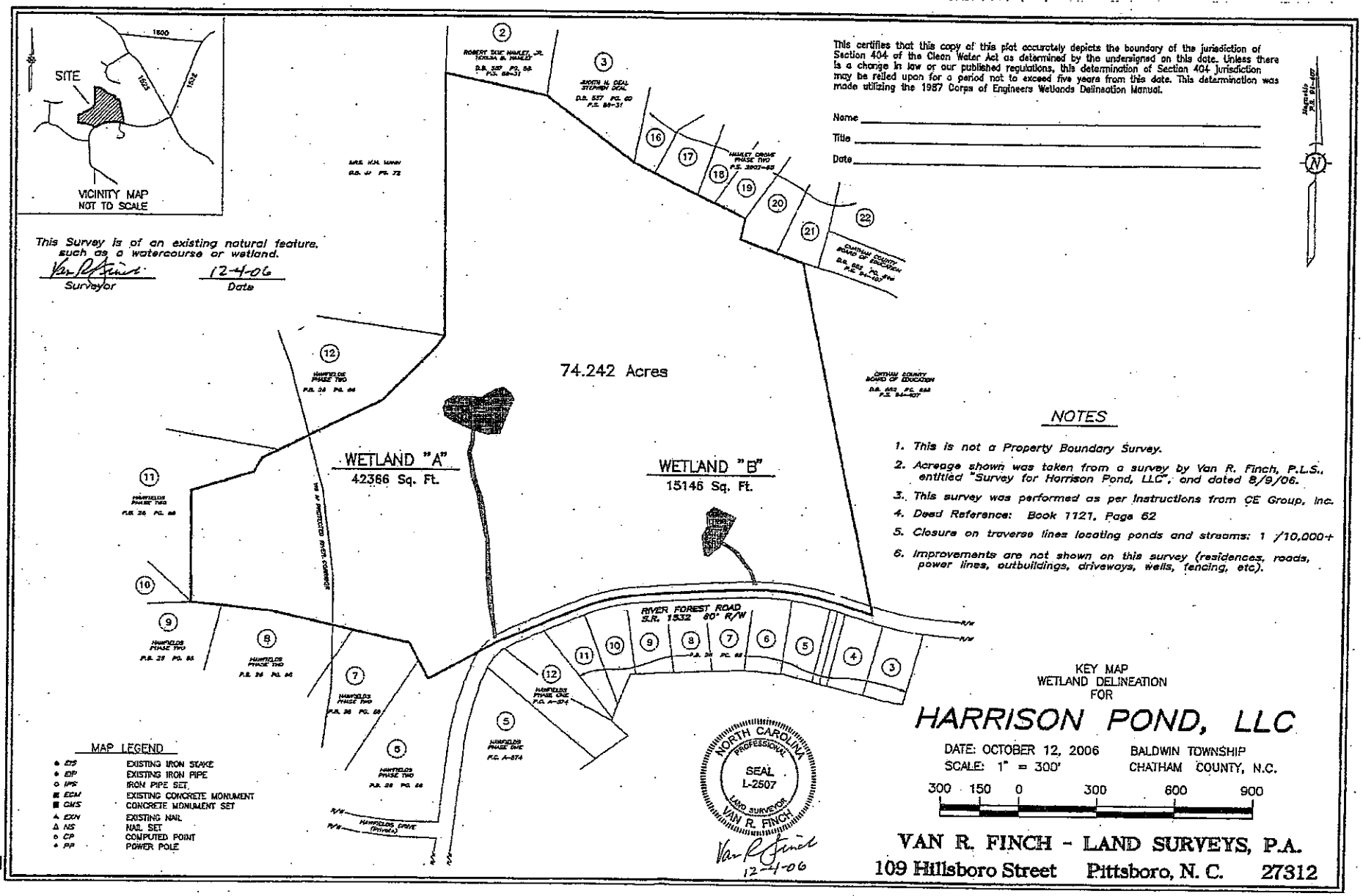

NOTES

1. This is not a Property Boundary Survey.
2. Acreage shown was taken from a survey by Van R. Finch, P.L.S., entitled "Survey for Harrison Pond, LLC", and dated 8/9/06.
3. This survey was performed as per Instructions from CE Group, Inc.
4. Deed Reference: Book 1121, Page 62
5. Closure on traverse lines locating ponds and streams: 1 /10,000+
6. Improvements are not shown on this survey (residences, roads, power lines, outbuildings, driveways, wells, fencing, etc).

KEY MAP
WETLAND DELINEATION
FOR

MAP LEGEND

EIS	EXISTING IRON STAKE
EIP	EXISTING IRON PIPE
IPS	IRON PIPE SET
ECM	EXISTING CONCRETE MONUMENT
CMS	CONCRETE MONUMENT SET
EXN	EXISTING NAIL
NS	NAIL SET
CP	COMPUTED POINT
PP	POWER POLE

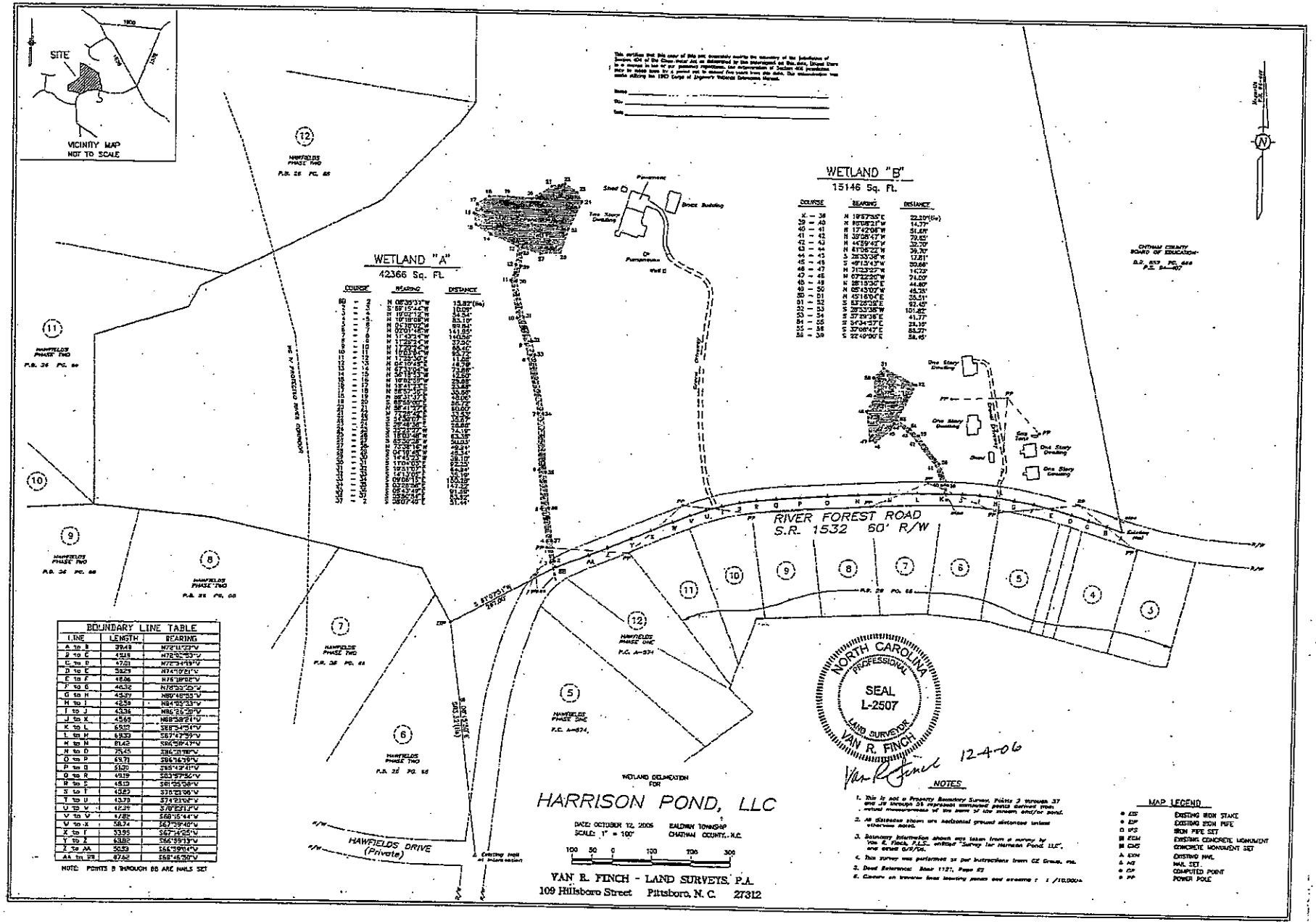

BOUNDARY LINE TABLE		
LINE	LENGTH	BEARING
A to B	39.49	N72°11'23"W
B to C	43.48	N72°52'53"W
C to D	47.01	N72°34'19"W
D to E	38.29	N74°09'21"W
E to F	18.06	N76°38'08"W
F to G	46.32	N78°00'25"W
G to H	43.37	N89°48'53"W
H to I	42.59	N84°52'33"W
I to J	43.34	N86°26'28"W
J to K	45.66	N88°58'21"W
K to L	65.32	S88°54'55"W
L to M	69.30	S87°47'39"W
M to N	81.42	S86°58'47"W
N to O	75.45	S86°08'08"W
O to P	69.71	S86°16'38"W
P to Q	51.20	S85°12'41"W
Q to R	49.19	S83°47'50"W
R to S	45.13	S81°55'58"W
S to T	45.23	S78°21'06"W
T to U	43.79	S74°21'10"W
U to V	42.25	S70°52'12"W
V to W	41.82	S66°15'44"W
W to X	58.74	S67°59'40"W
X to Y	53.95	S67°14'25"W
Y to Z	53.82	S66°59'13"W
Z to AA	50.53	S66°59'01"W
AA to BB	47.62	S68°46'20"W

NOTE: POINTS B THROUGH BB ARE NAILS SET

SUBDIVISION: Harrison Pond

DIRECTIONS: ± 0.45 miles southwest of the SR 1525 / SR 1532 Intersection

DEVELOPER: Harrison Pond LLC **PHONE NUMBER:** 919-542-2400

Major Development: X **Minor Development:** _____
Development with acreage of 10 acreage of 10 acres or more: _____

Proposed road names	OK to submit	DUPLICATED Do not Submit
Harrison Pond Drive		
Milton Court		
Sweet Pine Circle		

DATE SUBMITTED TO EOC: January 4, 2007
SUBMITTED BY: CE Group, Inc.
EOC OFFICER: _____
DATE ROADS APPROVED: _____
DATE FINAL PLAT RECEIVED: _____
DATE GIVEN TO 911: _____
DATE CONTACT MADE WITH NUMBERS: _____
SURROUNDING COUNTY CONTACTED: _____
PERSON SPOKEN WITH: _____
COMMENTS: _____

revised 4/19/02

[redacted]

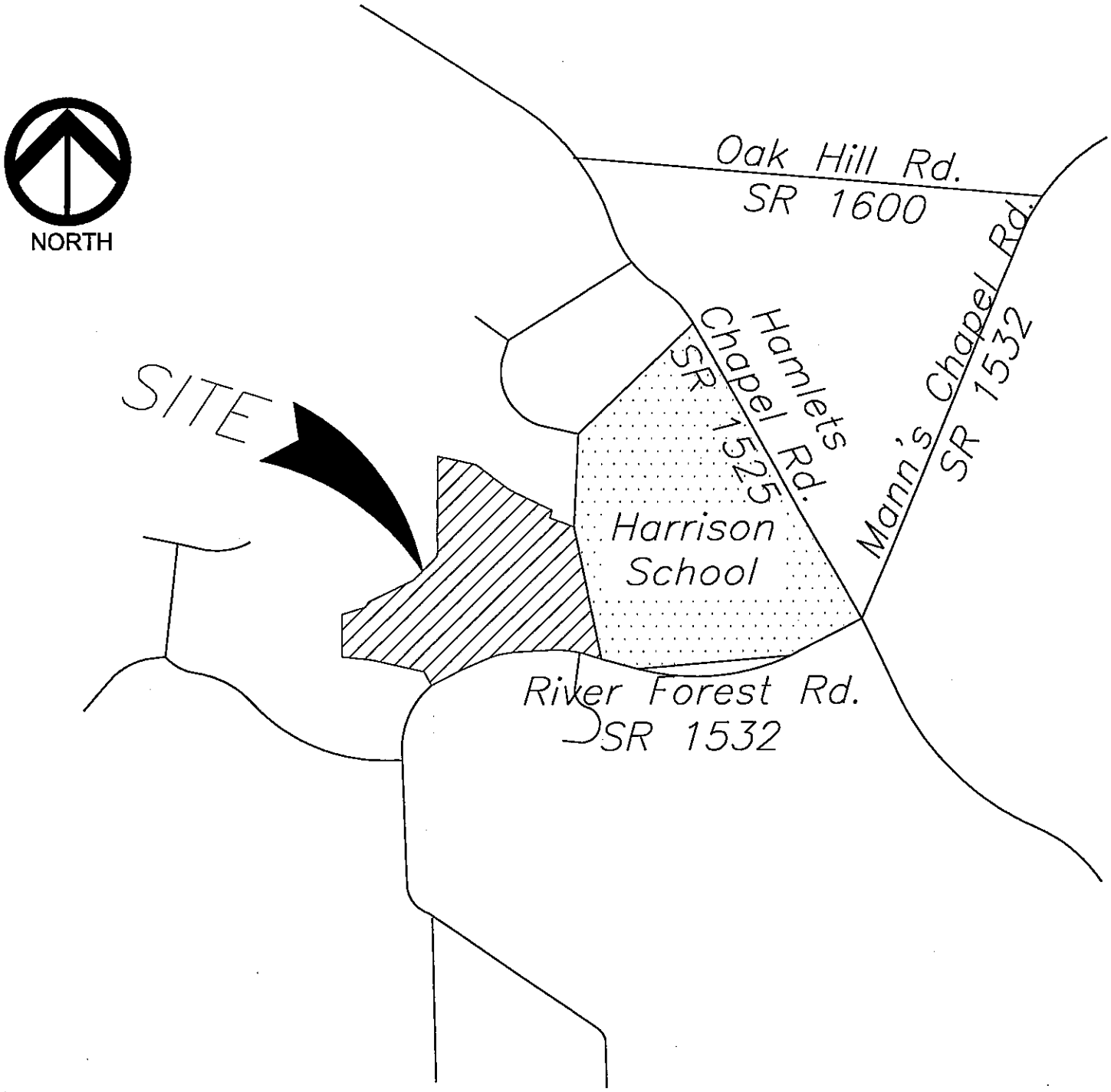

VICINITY MAP

NOT TO SCALE

Clay S Lowder

From: Clay S Lowder [clay@cegroupinc.com]
Sent: Thursday, January 04, 2007 3:58 PM
To: Denise Suits
Cc: Jeff Westmoreland; Nick Robinson; Mike Zaccardo; Mark P Ashness
Subject: Harrison Pond
Attachments: 101-03 Vicinity Map.pdf; Roads Submitted 010407.pdf

Denise,

Thanks for you help with the road names. I have also attached a vicinity map for your use. Please call with any questions.

Thank You
Clay S. Lowder
CE Group, Inc.

North Carolina
Division of Environmental Health

Division of Environmental Health
Terry L. Pierce, Director

Public Water Supply Section
Jessica G. Miles, Section Chief

State of North Carolina
Michael F. Easley, Governor

Department of Environment and Natural Resources
William G. Ross, Secretary

January 4, 2007

Mr. Charles Horne, County Manager
Chatham County Water System
Post Office Box 809
Pittsboro, North Carolina 27312

Re: Engineering Plans and Specifications Approval
Water Main Extension
Chatham County Water System to serve
Harrison Pond Subdivision
Chatham County
I.D. # 03-19-126

This is not an Authorization to Construct

Dear Mr. Horne:

Enclosed please find one copy of the "Application for Approval..." together with one copy of the referenced engineering plans and specifications bearing the Division of Environmental Health stamp of approval for the referenced project. These engineering plans and specifications are approved under Division of Environmental Health serial number 06-02118, dated December 21, 2006.

Engineering plans and specifications prepared by Michael V. Zaccardo, P.E., call for the installation of approximately 4,934 feet of 8-inch, 694 feet of 4-inch and 476 feet of 2-inch water mains, valves, hydrants and other related appurtenances along River Forest Road (S.R. 1532), Road A, Road B and Road C to serve Harrison Pond Subdivision with 42 lots.

Please note that an "Authorization to Construct" requires both this approval of Engineering Plans and Specifications and submittal of a complete Water System Management Plan. No construction shall be undertaken, and no contract for construction, alteration, or installation shall be entered into until the Department issues an Authorization to Construct letter in accordance with 15A NCAC 18C .0305(a).

These plans and specifications cited in the foregoing application are approved insofar as the protection of public health is concerned as provided in the rules, standards and criteria adopted under the authority of Chapter 130A-317 of the General Statutes. This approval does not constitute a warranty of the design, construction or future operation of the water system.

One copy of each enclosed document is being forwarded to our Raleigh Regional Office. The third copy is being retained in our permanent files.

If we can be of further service, please call on us at (919) 733-2321.

Sincerely,

Tony C. Chen, P.E.
Lead Engineer, Plan Review
Technical Services Branch

TCC/HSO/db

Enclosures: Approval Documents
cc: Michael L. Douglas, Regional Engineer
Chatham County Health Department
CE Group, Inc.

North Carolina
Division of Environmental Health

Division of Environmental Health
Terry L. Pierce, Director

Public Water Supply Section
Jessica G. Miles, Section Chief

State of North Carolina
Michael F. Easley, Governor

Department of Environment and Natural Resources
William G. Ross, Secretary

December 22, 2006

CHARLES HORNE, COUNTY MANAGER
P O BOX 809
PITTSBORO, NC 27312

Re: **Authorization to Construct**
HARRISON POND
CHATHAM CO WATER SYSTEM
CHATHAM COUNTY NC0319126

Dear Applicant:

This letter is to confirm that a complete Engineer's Report and a Water System Management Plan have been received, and that engineering plans and specifications have been approved by the Department for **HARRISON POND, DEH Serial No. 06-02118.**

The Authorization to Construct is valid for 24 months from the date of this letter. Authorization to Construct may be extended if the Rules Governing Public Water Supplies and site conditions have not changed. The Authorization to Construct and the engineering plans and specifications approval letter, shall be posted at the primary entrance of the job site before and during construction.

Approval must be secured from the Department before any construction or installation if:

- Deviation from the approved engineering plans and specifications is necessary; or
- There are changes in site conditions affecting capacity, hydraulic conditions, operating units, the function of water treatment processes, the quality of water to be delivered, or conditions imposed by the Department in any approval letters.

Upon completion of the construction or modification and in accordance with Rule .0303, the applicant shall submit a certification statement directly to HENRI OU of this office. This statement must be signed and sealed by a registered professional engineer stating that construction was completed in accordance with approved engineering plans and specifications, including any provisions stipulated in the Department's engineering plan and specification approval letter. Prior to Final Approval, the applicant shall submit a signed certification stating that the requirements in 15A NCAC 18C .0307 (d) and (e) have been satisfied and if applicable, a completed application for an Operating Permit and fee. Once the certification statements and operating permit application and fee, if applicable, are received and determined adequate, the Department will grant Final Approval in accordance with Rule .0309 (a). Therefore, no construction, alteration, or expansion of a water system shall be placed into service until Final Approval has been issued by the Department.

If we can be of further assistance, please call (919) 733-2321.

Sincerely,

Tony C. Chen, P.E.
Technical Services Branch
Public Water Supply Section

TCC:HSO

cc: MICHAEL L. DOUGLAS, P.E., REGIONAL ENGINEER
C E GROUP INC

State of North Carolina
Department of Environment and Natural Resources
Division of Environmental Health

North Carolina
Division of Environmental Health

Public Water System Authorization to Construct

Public Water System Name and PWSID No. (*if available*):	CHATHAM CO WATER SYSTEM NC0319126
Project Name:	HARRISON POND
Serial No.	06-02118
Issue Date:	12/21/2006
Expiration Date:	24 months after Issue Date

In accordance with NCAC 18C .0305, this Authorization to Construct must be posted for inspection at the primary entrance to the job site during construction.

BRADSHAW & ROBINSON, LLP
ATTORNEYS AND COUNSELORS AT LAW
HALL-LONDON HOUSE
128 HILLSBORO STREET
POST OFFICE BOX 607
PITTSBORO, NORTH CAROLINA 27312

PATRICK E. BRADSHAW
NICOLAS P. ROBINSON
COURTNEY A. BOWEN
ANDREW T. SLAWTER

(919) 542-2400
FAX 542-0496
robinson@bradshawrobinson.com

January 11, 2007

Dr. Ann Y. Hart, Superintendent
Chatham County Schools
P. O. Box 128
Pittsboro, North Carolina 27312

RE: Harrison Pond

Dear Dr. Hart:

Enclosed please find a site plan for the Harrison Pond subdivision. We will be applying for preliminary plat approval (the sketch design plat was previously approved) and seek comments that the school system may have, if any, with regard to the roadways depicted thereon.

This is a 42 lot subdivision located on a 74-acre parcel of land that is immediately behind the Perry Harrison School property on River Forest Road.

Please let us know if you have any comments.

Very truly yours,

Nicolas P. Robinson

NPR:jbs

Enclosures

c: Mark P. Ashness