CHATHAM COUNTY
SUBDIVISION REGULATIONS

ADOPTED JUNE 29, 1980
EFFECTIVE JULY 1, 1980

REVISED DECEMBER 2, 2008

AMENDED SEPTEMBER 6, 2011

AMENDED MAY 21, 2012

AMENDED SEPTEMBER 16, 2013 (EFFECTIVE JANUARY 1, 2014)

SECTION 1 GENERAL PROVISIONS 4

1.1 Title 5
1.2 Authority 5
1.3 Purpose 5
1.4 Jurisdiction 5
1.5 Enactment 6
1.6 Interpretation 6
1.7 Conflict with Public Provisions 6
1.8 Conflict with Private Provisions 6
1.9 Separability 7
1.10 Saving Provision 7
1.11 Reservations 7
1.12 Amendments 7
1.13 Variances 7
A. General 7
B. Conditions 8
C. Procedures 8
1.14 Prohibited Acts, Enforcement, and Penalties 8
1.15 Fees 9

SECTION 2 DEFINITIONS 10

2.1 Meaning of Words Generally 10
2.2 Meaning of Common Words 10
2.3 Meaning of Specific Words and Terms 10

SECTION 3 SECURITY FOR COMPLETION AND MAINTENANCE OF IMPROVEMENTS 19

3.1 Improvement and Adequate Security 19
A. Completion of Improvements 19
B. Adequate Security 19
C. Temporary Improvement 20
D. Costs of Improvements 20
E. Failure to Complete Improvement 20
F. Acceptance of Dedication Offers 20
3.2 Inspection of Improvements 21
A. General Procedure 21
B. Release or Reduction of security 21
3.3 Deferral or Waiver of Required Improvements 21
A. Conditions 21
B. Payment in Lieu of Improvements 21
3.4 Maintenance Guarantees – Public Roads 21

A. Purpose 21
B. Timing 22
C. Agreement 22
D. Form and Amount 22
E. Term 22
F. Release of Maintenance Guarantee 22

SECTION 4 Types of Subdivisions 23

A. Major Subdivisions 23
B. Minor Subdivisions 23
C. Exempt Subdivisions 23
D. Recording of Non-Building Lots 23

SECTION 5 Procedure for Subdivisions 24

5.1 General Purpose 24

5.2 Major Subdivision 24
A. General Procedure 24
B. Concept Plan 25
C. First Plat 27
D. Construction Plan 32
E. Final Plat 36
F. Appeals 38
G. Submission Dates 39
H. Notice of Review 39

5.3 Minor Subdivisions 40

SECTION 6 SPECIFICATIONS FOR DOCUMENTS TO BE SUBMITTED 42

6.1 First Plat 42
A. Name 42
B. Ownership 42
C. Description 42
D. Features 42

6.2 Additional First Plat Information 44
A. Environmental Documentation 44
B. Environmental Impact Assessment 44
C. Topographic Map 48
D. Soils Evaluation 48
E. Utility Plans 48
F. U.S. Army Corps of Engineers and Division of Water Quality Permits or Certifications 48

6.3 Construction Plan 48

6.4 Final Plat 48
A. General 48
B. Features 48
C. As-Built Utility Plans 50

SECTION 7 REQUIREMENTS AND MINIMUM STANDARDS FOR IMPROVEMENTS, RESERVATIONS, AND DESIGN 51

7.1 Suitability of the Land 51
A. Land Areas Unsuitable for Development 51
B. Land Subject to Flood 51
C. Land Subject to Erosion 51
D. Riparian Buffers 51

7.2 Rural Roads 51
A. Classification 51
B. Relation to Present, Proposed and Future Road System 51
C. Design Standards for Roads 52
D. Private Road 53

7.3 Blocks 55
A. Length 55
B. Width 55

7.4 Lots 55
A. Adequate Building Sites 55
B. Arrangement 55
C. Minimum Lot Dimensions and Areas 58

7.5 Public Use and Service Areas 60
A. Public Use Areas 60
B. Easements, Dedications, and Reservations 61
C. Community Assets 62

7.6 Zoning or Other Regulations 62

7.7 Conservation Subdivision—Alternative Standards for Development 62
A. Conservation Space Requirement 63
B. Composition of Conservation Space 63
C. Connectivity of Conservation Space 63
D. Permitted Uses of Conservation Space 63
E. Prohibited Uses of Conservation Space 63
F. Ownership of Conservation Space 64
G. Management of Conservation Space 64
H. Legal Instrument for Permanent Protection 64
I. Density Bonuses 64
J. Agricultural Preservation Density Bonus 65
K. Lot and Structure Placement 65
L. Private Driveway Easements 65
M. Public and Private Road Standards 66
N. Review and Approval 66

SECTION 8 DEVELOPMENT PREREQUISITE TO FINAL APPROVAL 68

8.1 Required Improvements 68
A. Monuments and Lot Markers 68
B. Street Development 68
C. Storm Drainage 68
D. Sanitary Sewers 68
E. Water Supply Systems 68
F. Installation of Utilities 69
G. Sidewalks 69
H. Street Name Signs and Traffic Signs 69
I. Guarantee in Lieu of Completed Improvements 69

SECTION 9 SPECIAL DEVELOPMENT STANDARDS PLANNED UNIT DEVELOPMENTS 70

9.1 Procedure for First Plat and Construction Plan Approval 70

9.2 Additional Required Information for First Plat Approval 70

9.3 Design Standards for Planned Unit Development 70

A. Common Open Space 70
B. Minimum Size 71
C. Roads 71
D. Other Design Standards 71

SECTION 10 COMPACT COMMUNITIES 72

10.1 Procedure 72

10.2 Required Information 72

10.3 Standards 72

SECTION 11 APPENDIX A: CERTIFICATION FORMS FOR INITIAL AND FINAL APPROVALS 73

FIRST PLAT 73
Form 1 73
Form 2 73
Form 3 74

FINAL PLAT 74
Form 4 74
Form 5 74
Form 6 74
Form 7 75
Form 8 75
Form 9 75
Form 10 76
Form 11 76
Form 12 76
Form 13 76
Form 14 77

SECTION 1 GENERAL PROVISIONS

1.1 Title

This document shall be known; cited and referred to as the Chatham County Subdivision Regulations.

1.2 Authority

By the authority of Chapter 153-A Article 18 of the General Statutes of North Carolina the Chatham County Board of Commissioners does hereby exercise the powers and authority to regulate the subdivision of land within its territorial jurisdiction.

1.3 Purpose

This ordinance is adopted for the following purposes:

A. To protect and provide for the public health, safety and general welfare of Chatham County.

B. To provide for the orderly growth and efficient development of the County.

C. To provide for the coordination of subdivision streets with existing and/or planned streets.

D. To insure an adequately planned street system and to avoid sharp curves, steep grades and hazardous intersections.

E. To provide for safe and adequate water and sewer systems, schools, parks and playgrounds.

F. To provide for the dedication of right-of-ways for streets and utilities.

G. To insure against flood damage.

H. To facilitate an orderly system for the design and layout of land.

I. To insure the proper legal description, and documenting of land.

J. To provide for the re-subdivision of land.

K. To avoid overcrowding of the land and extreme concentration of the population.

L. To provide for the orderly safe flow of traffic and to avoid congestion and traffic hazards.

M. To provide for the protection of lakes, streams, rivers, and wetlands within the jurisdiction.

N. To help implement the Chatham County Land Conservation and Development Plan.

The minimum standards specified herein are adopted and shall be considered as achieving the purposes listed above.

1.4 Jurisdiction

A. This document shall govern each and every subdivision of land, as herein defined, lying within Chatham County and outside the extraterritorial jurisdiction of any incorporated municipality as provided in Chapter 160A-360(d) of the General Statutes of North Carolina.

B. Whenever a subdivision of land takes place as herein defined, a plat shall be prepared, approved and recorded pursuant to the provisions specified herein. Since the definition of subdivision refers to the division of land into lots or building sites for sale or building development whether immediate or in the future, this shall be interpreted to mean that any time a separate residential structure is to be situated on a parcel of land, a separate lot shall be created and said lot shall, prior to any construction thereon, be reviewed according to the procedure set forth herein, unless said lot is exempted from the definition of subdivision. Parcels of land, which a owner does not intend to transfer, but upon which a mobile home(s) is located whether in a rental mobile home park or not in such a park are not required to comply with these regulations provided said land meets the requirements of the Health Department, provided that prior to any transfer of such a parcel except by will or intestacy, the owner shall comply with these regulations.

C. The owner of land shown on a subdivision plat submitted for recording, or his/her authorized agent, shall sign a statement on the plat stating whether or not any land shown thereon is within the jurisdiction of the subdivision regulations of Chatham County. (See Appendix A).

D. Whenever land shown on a plat for recordation is within the territorial jurisdiction of the subdivision regulations of Chatham County, but is exempt from the regulations, the owner of the land shown or his/her authorized agent shall sign a statement giving the reasons why.

1.5 Enactment

In order that land may be subdivided in accordance with these purposes and policy, these subdivision regulations are hereby adopted December 1, 2008 and become effective December 2, 2008.

1.6 Interpretation

The parts and provisions of this document in their interpretation and application shall be considered to be the minimum requirements for the promotion of the public health, safety and general welfare.

1.7 Conflict with Public Provisions

This document is not intended to interfere with, annul or abrogate any other ordinance, rule or regulation, statute or other provision of law applicable to Chatham County. Where any provisions of this document imposes limitations different from those imposed by any other provision of the document or any other ordinance, rule or regulation, or other provision or law, whichever provisions are more restrictive or impose higher standards shall control.

1.8 Conflict with Private Provisions

This document is not intended to abrogate any easement, covenant, or any other private agreement or restriction, provided that where the provisions of this document are more restrictive or impose higher standards or regulations than such easement, covenant, or other private agreement or restriction, the requirements of this document shall govern. Where the private provisions impose more restrictive or higher standards than this document then such private provisions shall be operative and supplemental to these regulations.

1.9 Separability

If any part or provision of these regulations or application thereof to any person or circumstances is held invalid by any court of competent jurisdiction, such judgment shall be confined in its operation to the part, provision or application directly involved in all controversy in which such judgment shall have been rendered. Such judgment shall not affect or impair the validity of the remainder of this document even without any such part, provision or application.

1.10 Saving Provision

These regulations shall not affect any litigation or enforcement action commenced prior to the effective date of these regulations as set forth in Section 1.5

Any subdivision for which (i) a sketch plan approval application is pending or (ii) sketch plan approval has been granted prior to the effective date of these regulations as set forth in Section 1.5 shall remain subject to the subdivision regulations in effect on the date of such application or approval, respectively; provided any approval remains valid throughout the review process. The intent of this section is that all such subdivisions should be allowed to be developed and to proceed to final plat approval in accordance with the regulations, and subject to any conditions of approval, that were in effect prior to the effective date of these regulations.

1.11 Reservations

Upon the adoption of these regulations according to law the Subdivision Regulations of Chatham County, North Carolina, effective prior to December 2, 2008, as amended, are hereby repealed, except as to such sections expressly retained herein.

1.12 Amendments

For the purpose of providing for the public health, safety and general welfare, the Chatham County Board of Commissioners may amend, when deemed necessary, the provisions imposed by these regulations. Public hearings on all proposed amendments shall be held in the manner prescribed by Chapter 153A-323 of the General Statutes of North Carolina.

1.13 Variances

A. General

Where the Planning Board finds that extraordinary hardships or practical difficulties may result from strict compliance with these regulations and/or the purposes of these regulations may be served to a greater extent by an alternative proposal, it may recommend variances to these subdivision regulations to the Board of Commissioners so that substantial justice may be done and the public interest secured, provided that such variance shall not have the effect of nullifying the intent and purpose of these regulations;

and further provided the Planning Board shall not recommend nor the Board of Commissioners grant such variances unless it shall make findings based upon the evidence presented to it in each specific case:

(1) That there are special circumstances or conditions affecting said property such that the strict application of the provisions of this ordinance would deprive the applicant of the reasonable use of his/her land.

(2) That the variance is necessary for the preservation and enjoyment of a substantial property right of the petitioner.

(3) That the circumstances giving rise to the need for the variance are peculiar to the parcel and are not generally characteristic of other parcels in the jurisdiction of this ordinance.

(4) That the granting of the variance will not be detrimental to the public health, safety and welfare or injurious to other property in the territory in which said property is situated.

B. Conditions
In approving variances, the Board of Commissioners may require such conditions as will, in its judgment, secure substantially the objectives of the standards or requirements of these regulations.

C. Procedures
A petition for any such variance shall be submitted in writing by the subdivider for the consideration of the Planning Board. The petition shall state fully the grounds for the application and all of the facts relied upon by the petitioner. Applicants shall pay any administrative fee established by the County at the time of the application or request.

1.14 Prohibited Acts, Enforcement, and Penalties

A. No owner or agent of the owner, of any land located within the territorial jurisdiction of the County, shall subdivide his/her land in violation of these regulations or transfer or sell land by reference to, exhibition of or any other use of a plat showing a subdivision of land before the plat has been properly approved under these regulations and recorded in the office of the Register of Deeds. The description by metes and bounds in the instrument of transfer or other documents used in the process of selling or transferring land does not exempt the transaction from these regulations.

B. The Register of Deeds shall not record a plat of any subdivision unless the plat has been approved in the manner prescribed by these regulations or the owner has certified that the subdivision is exempt from these regulations. (See 1.4C and D)

C. As provided in NCGS §153A-334, no officer or agency of the County may issue permits for the construction of any building or structure located on**,** or authorize the extension, connection or construction of any public or private facilities or services to a lot or other division of land that has not been properly created and approved, as provided by these regulations.

D. The Planning Department is responsible for enforcing these regulations.

E. The County may enjoin illegal subdivision, transfer or sale of land by action of injunction. Any violation of these regulations shall constitute a misdemeanor and violations

of such provisions shall be punished by a fine or by imprisonment for a term not exceeding 30 days, as provided in NCGS §153A-334.

F. As provided in NCGS §153A-123, any violation of the provisions of these regulations or a failure to comply with any of its requirements may subject the offender to a civil penalty of $50.00 per day for the first violation. If the same violation occurs on the same property within six (6) years after the initial violation is remedied, a civil penalty in the amount of $100.00 per day shall automatically apply. If the same violation occurs on the same property within six (6) years after the second occurrence of the violation is remedied, a civil penalty in the amount of $200.00 per day shall automatically apply. If the same violation occurs on the same property within six (6) years after the third or any subsequent occurrence of the violation is remedied, a civil penalty in the amount of $500.00 per day shall automatically apply. For the purposes of assessing civil penalties each day such violation continues shall be considered a separate and distinct offense. In the case where a stop work order is violated, the fine can immediately be assessed at $500 per day.

G. In situations where the property for which First Plat approval is sought was timbered in violation of development regulations, and the timber harvest results in the removal of all or substantially all of the trees that were protected under County regulations governing development of that tract, the County may withhold approval for up to three (3) years after the completion of the timber harvest.

The County may withhold approval of a First Plat for up to five (5) years after the completion of a timber harvest if the harvest results in the removal of all or substantially all of the trees that were protected under County regulations governing development of the tract for which the approval is sought, and the harvest was a willful violation of County regulations.

1.15 Fees

Reasonable fees sufficient to cover the costs of administration, inspection, technical review, publication of notice and similar matters may be charged to applicants for subdivision plat approval, variances and other administrative relief. The amount of the fees charged shall be as set forth in the County's annual budget or as established by resolution of the Board of Commissioners. Fees established in accordance herewith shall be paid upon submission of an application.

SECTION 2 DEFINITIONS

2.1 Meaning of Words Generally

Words and terms used in this document have their commonly accepted, dictionary meaning unless specifically defined or the context in which they are used in this document clearly indicates otherwise.

2.2 Meaning of Common Words

All words use in present tense include future tense.
All words in the plural include the singular, and all words used in the singular include the plural.
The word "shall" is mandatory, and the word "may" is permissive.
The word "building" includes the "structure and any part thereof".
The word "lot" includes the words "plot", "parcel", and "tract".
The word "person" includes the words "association", "company", "corporation", "firm", "individual", "organization" and "partnership".

2.3 Meaning of Specific Words and Terms

401 Certification-- The state certification required pursuant to Section 401 of the Clean Water Act (33 U.S.C. 1341) that the proposed activity for which an applicant is seeking a federal permit or approval will not degrade Waters of the State or otherwise violate water quality standards (See 15A North Carolina Administrative Code 2H.0500).

404 Permit - A federal permit required pursuant to Section 404 of the Clean Water Act before dredged or fill material may be discharged into waters of the United States, unless the activity is exempt from Section 404 regulation (e.g. certain farming and forestry activities).

Adjacent -Having a common border such as a lot line or street right-of-way.

Affordable Housing - A commonly accepted standard for affordability is that a household's monthly housing costs should not exceed 30 percent of its monthly net household income. Housing is usually considered "affordable" if it would meet this 30 percent standard for families considered "low-income," meaning they earn below 80 percent of the area median income (AMI). For example, the Raleigh-Durham-Chapel Hill MSA 2001 AMI is $66,100; under this case $66,100 x .80 = $52,880 x .30 = $15,864 / 12 (months) =$1,322 per month for housing cost.

Alley - A strip of land, publicly or privately owned, set aside primarily for vehicular service access to the back or side of properties otherwise abutting a street.

Applicant - The owner of land proposed to be subdivided or his/her representative. Consent shall be required from the legal owner of the premises prior to the Board of Commissioners or staff granting final approval of a subdivision plat. See also subdivider.

Architect - A person certified and currently licensed to practice architecture in North Carolina. This includes landscape architects.

Block - A tract of land bounded by visible physical boundaries such as streets, public parks, cemeteries, railroad right-of-ways, shorelines of waterways, or boundary lines of municipalities.

Board - The Chatham County Planning Board.

Board of Commissioners -The Chatham County Board of Commissioners.

Bona Fide Farm Activities – Any activity including the production and activities relating or incidental to the production of crops, fruits, vegetables, ornamental and flowering plants, dairy, livestock, poultry, and all other forms of agricultural products as defined in NCGS §106-581.1 having a domestic or foreign market. For purposes of determining whether a property is being used for bona fide farm purposes, any of the following shall constitute sufficient evidence that the property is being used for bona fide farm purposes:

a. A farm sales tax exemption certificate issued by the Department of Revenue.
b. A copy of the property tax listing showing that the property is eligible for participation in the present use value program pursuant to NCGS §105-277.3.
c. A copy of the farm owner's or operator's Schedule F from the owner's or operator's most recent federal income tax return.
d. A forest management plan.
e. A Farm Identification Number issued by the United States Department of Agriculture Farm Service Agency.

Bond - Any form of security**,** including a cash deposit, surety bond, collateral, property, or instrument of credit in an amount and form satisfactory to the Planning Department.

Building- Any structure having a roof supported by walls or columns constructed or used for residence, business, industry or other public or private purposes.

Building Setback Line - A line in the interior of a lot which is generally parallel to, and a specified distance from, the street right-of-way line or other lines; which creates a space between such lines in which no building shall be placed.

Community Water System - A private water company formed by a developer to serve a new subdivision.

Community Sewage System - A private sewer system including collection and treatment facilities established by a developer to serve a new subdivision.

Concept Plan – The initial map and supporting documentation submitted by a subdivision applicant for use by County staff, other agencies, and the public. This map will show general concepts and layout of streets, lots, open space, environmental constraints, and major easements for utilities or other associated common use such as drainage or pedestrian access. The Concept Plan is less detailed than the First Plat, which follows sequentially in the subdivision process.

Conservation Development - A net density approach where lot sizes are reduced and the land that is saved through such reductions is preserved as open space on separate lots owned and maintained through a homeowner's association, a nonprofit land conservancy or unit of State or local government.

Construction Plan – This map is similar to the First Plat, but will be more refined and detailed in certain cases where outside agency permits required minor changes. This plan will be submitted with outside agency permits issued.

County - Chatham County, North Carolina or the governing body of.

CU-CC Conditional Use – Compact Community - A compact residential development with a mixed commercial use village center with a conditional use permit required as a prerequisite to any use or development, as provided in the Compact Communities Ordinance.

Cul-de-sac - A street with only one end open to traffic and the other end being permanently terminated and a vehicular turn-around provided for the safe and convenient reversal of traffic movement. Length is measured from the center point of the turn-around to the center line of the connecting non-cul-de-sac street.

Dedication - The object or the act of an owner offering property or property rights to the public. Since a transfer of property rights is involved, dedications must be made by written recordable instruments.

Developer - The owner of land proposed to be subdivided or his/her representative. Consent shall be required from the legal owner of the premises.

District 1, Division of Highways - The Division of Highways of the North Carolina Department of Transportation; both agency and persons.

Double Front Lot - A continuous (through) lot which is accessible from both streets upon which it fronts.

Easement - The right to use another person's property, but only for a limited and specifically named purposes; the owner generally continues to make use of such land since he/she has given up only certain, not all, ownership rights.

Environmental Impact Assessment – A document that must be prepared for any proposed development project that is subject to and meets the criteria in Section 6.2 of the Subdivision Regulations which discusses the potential environmental impact of the proposed project and the methods proposed to mitigate or avoid significant adverse environmental impacts.

Environmental Impact Statement – A document that must be prepared pursuant to the National Environmental Policy Act of 1969, or the North Carolina Environmental Policy Act of 1971, regarding proposed federal or certain State actions respectively that significantly affect the quality of the human environment.

Environmental Review Board - The advisory body set up by the Board of Commissioners.

Exempt Subdivision – Certain kinds of land division not covered by this ordinance; see SECTION 4C, **Exempt Subdivisions** for details.

Family Subdivision - One or more divisions of a tract of land (a) to convey the resulting parcels, with the exception of parcels retained by the grantor, to a relative or relatives of direct lineage, or to the surviving spouse, if any, of any deceased lineal descendant, as a gift or for nominal consideration, but only if no more than one parcel from such tract is conveyed by the grantor to any one relative or such relative's surviving spouse; or (b) to divide land from a common ancestor among tenants in common, all of whom inherited by intestacy or by will. This provision shall apply only where the grantor or decedent already owned the land so divided before January 1, 1994.

Fast Track - An expedited review procedure for projects that meet certain criteria.

Final Plat - The map or plan of record of a subdivision and any accompanying material, as described in these regulations.

First Plat – This is a map and supporting documentation in sufficient detail to satisfy all review requirements and begin the process of applying for outside permits once it is approved. This document follows the Concept Plan and is followed by the Construction Plan in the subdivision process.

Flood Hazard Area - The minimum area of the flood plain that, on average, is likely to be flooded once every one hundred years (i.e., that has a one percent chance of being flooded each year) as identified on the most current Flood Insurance Rate Map Chatham County, North Carolina Unincorporated Area as referenced in the Chatham County Flood Damage Prevention Ordinance.

Grade - The slope of a road, street, or other public way, specified in percentage (%) terms.

Green Space - Natural undeveloped areas such as pastures, farmland, forests, wetlands, and lakes. Green space may also include landscaped perimeters and green landscape reserves along thoroughfares.

Health Department - The agency and person designated to administer local health regulations. This is the Chatham County Health Department.

Horizontal Plan - Part of the concept process; it is a map of the site in two dimensions showing where environmental constraints such as, flood zones and access exist, and then the conceptual map of the new development is shown for the site. This differs from a full-blown plan in that simple spatial data (such as those used by the County Geographic Information Systems department) are sufficient, and engineering level data, such as surveyed topography in three dimensions and a higher level of precision are not necessary.

Individual Septic Systems - A sewage disposal system developed to function on an individual lot basis. A septic tank, seepage tile sewage disposal system, or any other approved sewage treatment device.

Interior Lot - A lot other than a corner lot with frontage on only one street.

Land Use Plan – The Chatham County Land Conservation and Development Plan.

Local Road - See *Rural Road*

Lot - A tract, plot, parcel or plat of land intended as a unit for the transfer of ownership or for development.

Lot Area - The total horizontal area included within lot lines.

Lot Area (Useable) - Lot area suitable for septic fields. The area within the lot lines which is a contiguous or non-contiguous area suitable for a septic field, well, house and access. This area does not include areas such as public right-of-ways or land within riparian buffers, flood hazard areas, or floodways.

Lot Improvement - Physical changes made to raw land and structures on or under the land surface in order to make the land more useable for human activities. Typical improvements in these regulations would include, but not be limited to grading, street pavement, drainage ditches, and street name signs. Certain lot improvements shall be properly bonded as provided in these regulations.

Low Impact Development – See the Chatham County Stormwater Ordinance.

Major Collector - See *Rural Road*

Major Subdivision - All subdivisions not classified as minor subdivisions, consisting of six (6) or more lots, or any size subdivision requiring any new street, or extension, or the creation of any public improvements.

Minor Arterial - See *Rural Road*

Minor Collector - See *Rural Road*

Minor Subdivision - Any subdivision containing five (5) lots or less, fronting on an existing public street, not involving any new streets or road, or the extension or the creation of any public improvements.

Monuments - Markers placed on or in the land. Metal pins not less than three-fourth (3/4) inches in diameter and 18 inches long or concrete monuments four (4) inches in diameter or square and three feet long.

National Pollutant Discharge Elimination System Permit (NPDES) - Authorized by the Clean Water Act, this permit program controls water pollution by regulating point sources that discharge pollutants into waters of the United States.

Non-cul-de-sac Street - A street with more than one end open to traffic or which may be opened in the future, such as a stub street.

Non-Discharge Permit - Permit from the North Carolina Division of Water Quality to allow discharge of processed wastewater onto the land (i.e., such as spray irrigation).

Non-residential Subdivision - A subdivision whose intended use is other than residential, such as commercial, institutional or industrial. Any subdivision lot whose intended use is for bona-fide farm activities, with no residential component, is included in this definition.

Official Submission Date -The date of the meeting at which a plat is deliberated for approval.

Off-Site - Any premises not located within the area of the property to be subdivided, whether or not in the same ownership of the applicant requesting subdivision plat approval.

Official Maps or Plans - Any maps or plans officially adopted by the Board of Commissioners as a guide to the development of Chatham County. The Zoning Map and Thoroughfare Plan are examples of an official map and plan, respectively.

Open Space - A restricted reservation of land located within a development with limited low-impact amenities. Amenities may be passive or active. A few examples include but

are not limited to: green space both natural and landscaped, detention areas, trails, lakes, pavilions, benches, outdoor cooking facilities, and active recreational facilities such as ball and soccer fields, playgrounds, and the like.

Owner - Any person, group of persons, firm or firms, corporation or corporations, or any other legal entity having legal title to or sufficient proprietary interest in the land sought to be subdivided under the regulations.

Park - See *Recreation Area*

Planning Board - The Chatham County Planning Board.

Planned Unit Development (PUD) - Development with a unique design that is comprised of a mixture of housing densities and types (detached and attached) and land uses, including open space. The open space shall be deeded to a property owner's association or an appropriate governmental body. A PUD shall be developed according to the master plan as specified in Section 9 of these regulations.
Principal Arterial - See *Rural Road*

Private Street - An un-dedicated private right-of-way which affords access to abutting properties according to the standards of this ordinance and requires a subdivision streets disclosure statement in accordance with the North Carolina General Statutes.

Public Improvement - Any drainage ditch, roadway, sidewalk, lot improvement or other facility for which the local government may ultimately assume the responsibility for maintenance and operation, or which may affect an improvement for which local government responsibility is established.

Public Sewer - A system to provide the public with the collection and treatment of wastewater which shall be owned and operated by a county, municipal government, or service district.

Public Street - A dedicated public right-of-way which affords access to abutting property and meets the standards of this ordinance and the most recent North Carolina Department of Transportation minimum construction standards for subdivision roads.

Public Water - A system to provide or furnish water to the public which shall be owned and operated by a county, municipal government, or service district.

Recreation Area - An area of land and/or water resources that is developed for active and/or passive recreation pursuits with various man-made features that accommodates such activities.

Recreation Exaction Fee - A payment in lieu of land dedication paid to Chatham County to defray the cost of providing recreation services to new development.

Register of Deeds - Chatham County Register of Deeds.

Reservation - An obligation to keep property free from development for a stated period of time for the purpose of making the land available for a specified use at a later time.

Residential Subdivision - A subdivision whose intended use is single- or multi-family residential or duplex development.

Right-of-way - A strip of land occupied or intended to be occupied by a street, crosswalk, railroad, road, electric transmission line, oil or gas pipeline, water main, sanitary or storm sewer main, or for another special use. The usage of the term "right-of-way" for land plating purposes shall mean that every right-of-way hereafter established and shown on a Final Plat is to be separate and distinct from the lots or parcels adjoining such right-of-way and not included within the dimensions or areas of such lots or parcels. Right-of-ways intended for streets, crosswalks, water mains, sanitary sewers, storm drains, or any other use involving maintenance by a public agency shall be dedicated to public use by the owner of the property on which such right-of-way is established.

Riparian Buffers – A natural or vegetated area that provides protective distance between a seep, spring, stream, perennial water body or wetland and an adjacent land area. The riparian buffer shall be measured horizontally on a line perpendicular from the top of bank or from the normal pool elevation of a perennial water body or wetland. The required riparian buffer distances are specified in the Chatham County Watershed Protection Ordinance.

Road Right-of-way Width - The distance between property lines measured at right angles to the centerline of the street.

Rural Road - For purposes of this ordinance the following classification of rural roads apply:

> **Principal Arterial:** A rural link in a network of continuous routes serving corridor movements having trip length and travel density characteristics indicative of substantial statewide or interstate travel and existing solely to serve traffic. This network would consist of interstate routes and other routes designed as principal arterials.
>
> **Minor Arterial:** A rural link in a network joining cities and larger towns and providing intrastate and inter-county service at relatively high (55mph) overall travel speeds with minimum interference to through movement. The network would primarily serve through traffic.
>
> **Major Collector:** A road which serves major inter-county travel corridors and traffic generators and provides access to the arterial system.
>
> **Minor Collector:** A road which provides service to small local communities and links with locally important traffic generators with their rural hinterland.
>
> **Local Road:** A road which primarily provides access to adjacent land and for travel over relatively short distances.

Setback - The distance between a building and the street line or property line nearest thereto.

Staff - Chatham County employees.

Street Line - The legal line between street right-of-way and abutting property.

Street Sign - The sign designating the official name and/or number of the street.

Stub Street (**Stub Out**) - A street with one end open to traffic and one end temporarily closed, with a temporary turn around for the safe and convenient reversal of traffic

movement. The end that is temporarily closed shall have access reserved on site for future extension.

Structure - Anything constructed or erected, including but not limited to buildings, which requires location on the land or attachment to something having permanent location on the land.

Subdivider - Any person who (1) having an interest in land, causes it, directly or indirectly, to be divided or who, (2) directly or indirectly, sells, leases, or develops, or offers to sell, lease, or develop, or advertises for sale, lease, or development, any interest, lot, parcel, site, unit, or plat in a subdivision, or who (3) engages directly or through an agent in the business of selling, leasing, developing, or offering for sale, lease, or development a subdivision, of any interest, lot, parcel, site, unit, or plat in a subdivision, and who (4) is directly or indirectly controlled by, or under direct, or indirect common control with any of the foregoing.

Subdivision - All divisions of a tract or parcel of land into two or more lots, building sites, or other divisions when any one or more of those divisions are created for the purpose of sale or building development (whether immediate or future) and includes all division of land involving the dedication of a new street or a change in existing streets; however, those instances listed under SECTION 4C, **Exempt Subdivisions** are not subject to these regulations pursuant to this document.

Subdivision Agent - Any person who represents, or acts for or on behalf of a subdivider or developer, in selling, leasing, or developing, or offering to sell, lease, or develop any interest, lot, parcel, unit, site or plat in a subdivision, except an attorney-at-law whose representation of another person consists solely of rendering legal services.

Subdivision Plat - The final map or drawing, described in these regulations, on which the subdivision may be submitted to the Register of Deeds for recording.

Surveyor - A qualified land surveyor registered and currently licensed to practice surveying in the State of North Carolina.

Technical Review Committee – A committee composed of staff from various departments in Chatham County government and representatives of other local, state and federal agencies. Representatives of other outside agencies or groups may be included as well.

Temporary Improvement - Improvements built and maintained by a subdivider during construction of the subdivision and prior to release of any performance bond.

Unit or Dwelling Unit - A building or portion thereof designed, arranged or used for living quarters for one family.

Unobstructed – Free of obstacles that delay, impede or hinder passage and/or access. An unobstructed roadway allows the two-way movement of vehicles, free of on-street vehicular parking and other obstacles.

Usable Land -See *Lot Area (Useable)*

Water Hazard Area - The area adjacent to continuously flowing waterways and intermittent streams as designated on the most recent USGS quadrangle sheets which due

to its proximity to the waterway, soils and/or other topographic information is deemed not suitable for structures or septic fields due to potential water pollution. (Note: This is a historic referenced that may appear on older plats. It is no longer used in the ordinance after December 2, 2008)

Zoning Ordinance – The Chatham County Zoning Ordinance for Baldwin, Williams, New Hope, Cape Fear, and portions of Haw River, Oakland, Center, Albright, Gulf, Hickory Mountain, Matthews, and Hadley Townships.

SECTION 3 SECURITY FOR COMPLETION AND MAINTENANCE OF IMPROVEMENTS

3.1 Improvement and Adequate Security

A. Completion of Improvements

Before the plat is signed by the Chair of the Board of Commissioners or his/her designee, all applicants shall be required to complete, in accordance with the County's requirements, all the street, sanitary, and other improvements in the subdivision, including without limitation, improvements on the individual lots of the subdivision as required in these regulations, specified in the final subdivision plat, and as approved by the County and to dedicate same to the appropriate government body, free and clear of all liens and encumbrances on the property and public improvements thus dedicated.

B. Adequate Security

(1) When seventy-five (75) percent of the improvements based on the total estimated cost of the improvements to be installed have been completed, all weather access for emergency vehicles has been provided, and waterlines are completed and ready for acceptance by the County if public water is available; upon request the County may enter into a contract with the applicant under which the applicant agrees to complete all required improvements. Once the contract has been executed by the County and the applicant and the security required herein is provided, the final plat may be signed and recorded if all requirements of this Ordinance, except the completion of the improvements, have been met. To secure the obligation under the contract, the applicant shall provide any one or a combination of the guarantees set forth below to cover the costs of the uncompleted improvements. The amount of the security shall not be less than 150% of an amount determined by a licensed architect, registered engineer, surveyor, or licensed contractor acceptable to the County as sufficient to secure to the County the satisfactory construction, installation, and dedication of the incomplete portion of required improvements including labor and material payments. The security shall also assure all lot improvements on the individual lots of the subdivision as required in these regulations.

(2) Such adequate security shall comply with all statutory requirements and shall be satisfactory to the County Attorney as to form and manner of execution as set forth in these regulations, and the Planning Director as to sufficiency (i.e., inflation or rising construction costs shall be taken into account of security amount). A copy of the power of attorney for any countersigning agent shall be attached. The period in which required improvements must be completed shall be specified by the County prior to the recordation of the final subdivision plat and shall be incorporated in the contract. The County Attorney may at any time during the period of such security accept a substitution of principal or sureties on the security. The security shall take one of the following forms:

a. Surety Performance Bond(s)
   i. The applicant shall provide a surety bond from a bonding company authorized to issue such bonds in North Carolina.
   ii. The bond shall be payable to Chatham County and shall be in an amount equal to at least 150% of the entire estimated cost, as approved by the County, of installing all uncompleted improvements.

Applicants must submit a request for bonding including a detailed construction cost estimate upon submission of the final plat.

iii. The bond amount and term shall be as approved by the Planning Director and such consultants as deemed necessary.

iv. The County Attorney shall review the submitted bond and make a recommendation regarding its legal sufficiency to the Planning Director.

b. Cash or Equivalent Security

i. The applicant shall deposit cash, an irrevocable letter of credit, or other instrument readily convertible to cash at face value, with the County. Any irrevocable letter of credit or other instrument shall be made payable to Chatham County. The amount of deposit shall be equal to at least 150% of the entire estimated cost, as approved by the County, of installing all uncompleted improvements.

ii. The amount and term of such security shall be as approved by the Planning Director and such consultants as deemed necessary.

iii. The County Attorney shall review the submitted security and make a recommendation regarding its legal sufficiency to the Planning Director.

(3) A contract, satisfactory to the County as to form, shall accompany any security accepted by the County for improvements, and shall be signed and approved prior to recordation of the Final Plat.

C. Temporary Improvement

The applicant shall build and pay for all costs of temporary improvements required by the County and shall maintain the same for the period required by the County. Prior to construction of any temporary facility or improvement, the applicant may be required to file with the County a separate suitable financial guarantee for temporary facilities, such guarantee assuring that the temporary facilities will be properly constructed, maintained and removed.

D. Costs of Improvements

All required improvements shall be made by the applicant, at his/her expense, without reimbursement by the County.

E. Failure to Complete Improvement

In those cases where the required improvements have not been installed in accordance with the contract, an authorized agent of the County may declare the applicant to be in default and require that all the improvements be installed regardless of the extent of the building development at the time of default. The authorized agent of the County may take such actions necessary to collect on the security and provide for the completion of the required improvements.

F. Acceptance of Dedication Offers

Acceptance of formal offers of dedication of public areas, easements, and parks shall be by deed or other instrument acceptable to the County. The approval by the County of a subdivision plat shall not be deemed to constitute or imply the acceptance by the County of any easement, or park shown on said plat.

3.2 Inspection of Improvements

A. General Procedure

The County and other reviewing agencies may provide for inspection of required improvements during construction to assure their satisfactory completion. If the reviewing agencies find upon inspection that any of the required improvements have not been constructed in accordance with the construction standards and specifications of the County or agencies involved, the applicant shall be responsible for completing the improvements. Wherever the cost of improvements is covered by a financial security, the applicant and the bonding company, if applicable, shall be jointly and severally liable for completing the improvements according to specifications.

B. Release or Reduction of security

(1) Certificate of Satisfactory Completion

The County will not accept the required improvements, nor will an authorized agent of the County release or reduce said security, until the District Engineer of the North Carolina Department of Transportation (NCDOT), or other appropriate authority, has submitted a certificate stating that all required public street improvements have been satisfactorily completed, or until an engineer, surveyor, architect or contractor acceptable to the County has certified that all other required improvements have been completed in conformity with the requirements of this ordinance. Upon such certification, the County may thereafter accept the improvements in accordance with the established procedure and release the financial guarantee.

(2) Reduction of Security

A guarantee may be reduced upon actual completion of required improvements and then only to the ratio that the required improvements completed bears to the total required improvements for the subdivision.

3.3 Deferral or Waiver of Required Improvements

A. Conditions

The County may defer or waive at the time of final approval, subject to appropriate conditions, the provision of any or all such improvements as, in its judgment, are not requisite in the interests of the public health, safety, and general welfare, or which are inappropriate because of inadequacy or lack of connecting facilities.

B. Payment in Lieu of Improvements

Whenever it is deemed necessary by the County to defer the construction of any improvement required herein because of incompatible grades, future planning, inadequate or lack of connecting facilities, or for other reasons, the applicant may be required to pay his/her share of the costs of the future improvements to the County prior to signing of the final subdivision plat, or the applicant shall post financial security assuring completion of said improvements upon demand of the County.

3.4 Maintenance Guarantees – Public Roads

A. Purpose

Maintenance guarantees shall be required for the purpose of ensuring that roads that are to be dedicated to the public are properly maintained and free from defects between the time of construction and the time of formal acceptance for maintenance by the NCDOT.

B. Timing

A maintenance guarantee shall be in place before the recordation of any Final Plat for subdivisions containing public road improvements. If an applicant provided security for public road improvements as specified in Section 3.1, a maintenance guarantee shall be in place before any such security is released.

C. Agreement

Maintenance guarantees for public road facilities shall stipulate that the applicant will maintain all required public road improvements, drainage improvements, and sedimentation and erosion control improvements to the standards of any County Ordinances and/or state or federal regulations until the public road improvements are added to the state-maintained road system. The guarantee shall also state that the applicant will be responsible for correcting any defects that may arise during the maintenance period and shall remove temporary sedimentation and erosion control measures.

D. Form and Amount

Maintenance guarantees shall be in the form of a performance bond, irrevocable letter of credit, or cash escrow account, and shall include a contract, approved to form by the County Attorney, between the County and applicant.

(1) The amount of the guarantee shall be at least 15% of the total cost of constructing the public road improvements, excluding the costs of clearing and rough grading.

(2) The estimated cost of the required improvements must be itemized and certified by a licensed architect, registered engineer, surveyor, or licensed contractor acceptable to the county.

(3) Cost estimates must be based on industry norms within Chatham County.

(4) The Planning Director, County Manager or Board of Commissioners may require a higher guarantee amount when deemed necessary to address higher potential correction costs due to the subdivision's size and site characteristics, but in no event may the amount exceed 25% of estimated construction costs.

E. Term

The maintenance guarantee shall have an initial term of two years and shall provide for renewal of the maintenance guarantee at the option of the County for additional two-year terms with an updated cost estimate to be provided prior to renewal.

F. Release of Maintenance Guarantee

The maintenance guarantee shall be released by the County once the NCDOT has officially accepted the public road(s) covered by the maintenance guarantee into the state road system for maintenance.

SECTION 4 Types of Subdivisions

For the purposes of these regulations, subdivisions shall be classified into three (3) types. This ordinance only regulates the first two, major and minor. Exempt Subdivisions are included in the list to help applicants determine which category they are in. The specific review procedure the subdivision plat follows depends upon its classification. Subdivision plats shall be classified as follows (Note: Conservation Subdivisions can be Major or Minor Subdivisions; for information see section 7.7):

A. Major Subdivisions

All subdivisions not classified as minor subdivisions, including but not limited to subdivisions of six (6) or more lots, or any size subdivision requiring any new street, the creation of any public improvements, or the request for a variance.

B. Minor Subdivisions

Any subdivisions containing five (5) lots or less with access to an existing public street, not involving any new street or road, the creation of any public improvements, or the request for a variance.

C. Exempt Subdivisions

The following are not subject to any subdivision regulations pursuant to this document:

1. The combination or recombination of portions of previously platted lots if the total number of lots is not increased and the resultant lots are equal to or exceed the standards of the county as shown in its subdivision regulations;

2. The division of land into parcels greater than ten (10) acres if no street right-of-way dedication is involved;

3. The public acquisition by purchase of strips of land for widening or opening streets or other public transportation corridors or greenways;

4. The division of a tract in single ownership, the entire area of which is not greater than two acres, into not more than three lots if no street right-of-way dedication is involved and if the resultant lots are equal to or exceed the standards of the county as shown by its subdivision regulations;

5. A conveyance made for the purpose of dividing up the estate of a decedent among his/her heirs and devises, by will or the courts; and

6. The combination or recombination of previously recorded lots or portions of previously recorded lots if the total number of lots is not increased, provided the resultant lots meet or exceed the standards of the Health Department.

D. Recording of Non-Building Lots

Subdivision lots which are not approved for building development may be approved for recording through the minor subdivision procedure. Such plats shall display a note stating that the lots are not approved for building development and do not meet the requirements of the subdivision regulations, but are approved for recording purposes only.

SECTION 5 Procedure for Subdivisions

5.1 General Purpose

The purpose of this section is to establish the procedure that shall be followed by the developer in submitting plats to the Planning Board and other agencies. Major and Minor Subdivisions follow different procedures outlined below. Exempt subdivisions are not regulated by this ordinance.

5.2 Major Subdivision

A. General Procedure

The procedure consists of four main steps:

(1) Concept Plan
(2) First Plat
(3) Construction Plan
(4) Final Plat

The overriding consideration in having a four step procedure is to assure that subdivisions develop soundly. Other objectives are as follows:

(1) Assist the developer in the sound, environmentally appropriate, and economical development of his/her property through the examination of the suitability of the property for subdivision development before surveying expenses and improvement costs are incurred.
(2) All appropriate county departments, state and federal agencies, administrative and utility agencies aid in the design of proposed subdivisions.
(3) The community is engaged and is informed through the process.
(4) Adequate time is allowed for the review of the proposed subdivision.
(5) Environmental concerns are adequately and completely addressed.
(6) Adequate time is allowed at the onset of the process to provide feedback before the proposed subdivision is designed.

B. Concept Plan

(1) Purpose

The concept plan is a process by which the applicant engages the community in discussion regarding the goals of the development. Environmental documentation showing existing site conditions will be required. Data layers available from the Chatham County GIS office will meet this requirement, unless additional documentation is required to show existing site conditions.

The developer has the choice to design conventionally, or present a conservation design with Low Impact Development (LID) and Best Management Practice (BMP) features. A Conservation Subdivision (see Section 7.7) encourages the preservation of open space. This voluntary preservation allows for a density bonus giving the applicant more lots than would be allowed under conventional patterns.

Chatham County staff will review the concept designs. However, limited surveying and engineering are required by applicant. The goal is to achieve a better site plan for the developer and the public that reduces environmental impacts.

Developers are encouraged to be innovative with their design and go beyond minimum regulations for safe and orderly growth by advocating sustainable planning and development practices that encourage the types and patterns of land development that will preserve and enhance what is best about our community.

(2) Process for Concept Plan Review

a. Pre-application meeting - This initial consultation with County staff is to provide information on the subdivision regulations and processes, including required environmental information and checklists.

b. Initial Environmental Documentation Conducted - Utilizing the guidelines provided by the Planning and Environmental Quality Departments, the applicant will develop an overview of the constraints on the site that will need to be addressed during the process.

c. Draft Initial Concepts - This is a horizontal plan giving general overviews of suggested layouts for development. It is encouraged that one of the concept drafts (if more than one is offered) be a sustainable development plan with a conservation design incorporating Low Impact Development (LID) options.

d. Mandatory Meeting with Neighbors/Community - This is to offer an open dialogue between applicant and neighbors/community for better communication, to share goals of the development and gather information from neighbors about any concerns about the land, the goal being to achieve a balance for the environment, neighborhood/community and applicant. The result is a better overall plan up front that is, as much as possible, embraced by the community and county and also saves applicant from spending money on multiple plans, surveying and engineering. There are specific public notice requirements:

   (1) Posting of the property with a "Development Input Meeting" sign along every road frontage. The signs will be the same dimensions and letter sizes as the County's notification signs for other land use notification requirements.

   (2) Mailed notification letters to residents within four hundred feet (400') of the property to be developed (adjacent right-of-way widths not counted as part of the 400'). The applicant will supply the addressed, stamped

envelopes and letters to the planning department and the planning department will send the letters.

(3) Post the meeting notice on the County website.

e. Revised Draft Concept Plan - This is still a horizontal plan by the applicant that may be revised based on previous meetings and discussions.

f. Technical Review Committee - Applicant presents draft concept plan (and development timeline, if necessary) to Planning Department for scheduling to go before the Technical Review Committee (TRC). The TRC will meet with the applicant to go over the concept plan for conflicts with existing ordinances and policies.

g. Applicant prepares First Plat - With feedback from above, applicant now prepares First Plat for submitting to Planning Board with the documentation required by these regulations and then to the Board of Commissioners for approval.

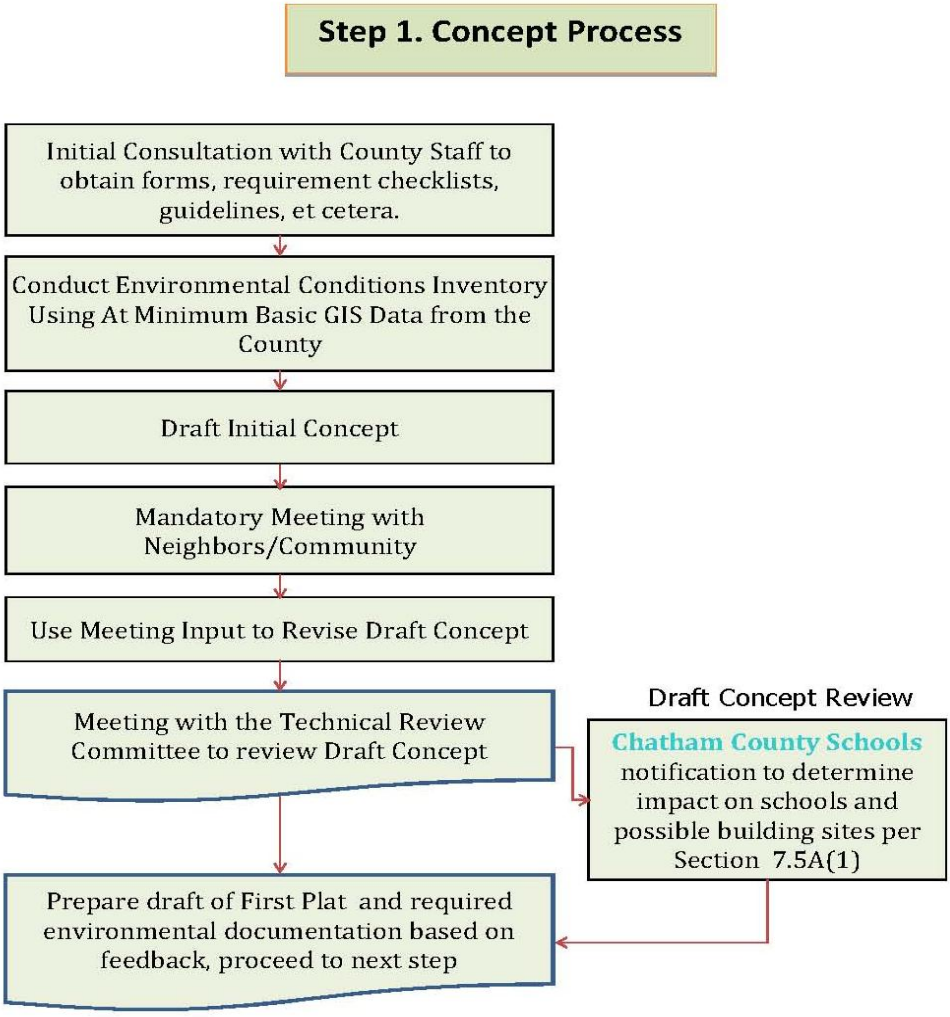

Figure 1: Concept Plan Process

C. First Plat

(1) Purpose

The First Plat is the point at which the applicant submits the detailed proposal to the County for review and approval by the Planning Board and Board of Commissioners. Approval of the First Plat allows the applicant to complete the engineering necessary to receive all required permits and submit the Construction Plan to the Planning Department for approval.

(2) Review of Environmental, Historical Structures and Cemeteries Information

Prior to submittal of the First Plat to the Planning Department, the applicant shall submit the required environmental information to the Environmental Quality Department for review. Depending on the number of proposed lots, the applicant is required to submit either general environmental documentation or an Environmental Impact Assessment. At this time the applicant shall also notify the Chatham County Historical Association of the presence of any historical structures or cemeteries on or adjacent to the property.

a. *General Environmental Documentation Review Process*
   Environmental Documentation is required to be submitted for all major subdivisions consisting of less than 50 lots.
   (1) The applicant shall submit the General Environmental Documentation packet to the Environmental Quality Department for review.
   (2) Within 30 days of submittal, the Environmental Quality Department shall review the information and forward a report to the applicant and Planning Department.

b. *Environmental Impact Assessment Review Process*
   An Environmental Impact Assessment is required to be submitted for all major subdivisions consisting of 50 lots or more. See Section 6.2(A).
   (1) The applicant shall submit the Environmental Impact Assessment to the Environmental Quality Department for review.
   (2) The Environmental Quality Department will forward the Environmental Impact Assessment to an environmental consultant hired by the county for a peer review. The cost of this peer review shall be paid by the applicant prior to submittal of the First Plat to the Planning Department.
   (3) Within 60 days, the Environmental Quality Department shall forward a report to the applicant and Planning Department.

c. *Historical Structures and Cemeteries Notification*
   (1) The applicant shall notify the Chatham County Historical Association when structures of greater than 50 years in age or having historical significance are on the property or within 100 feet of the development on adjacent property.
   (2) If there is evidence of presence of a cemetery on the property, the applicant shall notify the Chatham County Historical Association.
   (3) The Chatham County Historical Association may forward recommendations for the historical structures or cemeteries to the Planning Department.

(3) Planning Department Review

a. Applicant submits First Plat to Planning Department. This is to be received by the Planning Department at least forty-six (46) days prior to the Planning Board meeting, but not longer than six (6) months from the date of the Environmental Resources Department report.

b. The Planning Department shall have 14 days from the date of submittal to notify the applicant if the First Plat contains detailed supporting information that is sufficient to allow for the review of the proposed subdivision under these regulations.

(1) If the Planning Department determines the information is not sufficient for review, the Department shall notify the applicant of the specific information that is required for review.
(2) The Planning Department shall take no further action on the First Plat until the applicant submits the required information.
(3) Once the applicant corrects the identified deficiencies, the applicant shall resubmit to the Planning Department at least forty-six (46) days prior to the next Planning Board meeting, and the Department shall have 14 days to review the information and notify the applicant that the information is sufficient for review.
(4) A determination that an application contains sufficient information for review as provided in this subsection (b) does not limit the ability of other county agencies, the Planning Board or the Board of Commissioners to request additional information during the review process.

c. Once the Planning Department has determined sufficiency, the applicant shall provide time(s) during at least two separate days for site visits by County staff, advisory board and elected officials. This shall not limit County staff from making additional site visits at other times.

d. The submittal is reviewed by the Technical Review Committee prior to the Planning Board meeting for comments and recommendations from other agencies, including the Chatham County Schools.

(1) The Planning Department may postpone review of the proposal by the Planning Board for one month prior to notification to the adjacent property owners.
(2) The Department shall notify the applicant within ten (10) days of the Technical Review Committee meeting of postponement.

e. The Planning Department shall notify the applicant and adjoining property owners of the Planning Board review pursuant to Section H below.

f. The Planning Department forwards the staff recommendation to the Planning Board and applicant.

(4) Planning Board Review

a. The first Planning Board meeting shall include a Public Hearing to receive public comment on the proposed subdivision.
b. Following the Public Hearing, the Planning Board shall review the proposal, staff recommendation and public comments and indicate their recommendation for approval, disapproval or approval subject to modifications. If the Board recommends disapproval or approval subject to modifications, the necessary reasons or modifications will be specified in the minutes of the meeting.
c. The Planning Board shall have two (2) meetings in which to act on a proposal.

(5) Board of Commissioners Review

a. The Board of Commissioners shall review the proposal and the record, including the staff recommendation, public comments and Planning Board recommendation.
b. The Board of Commissioners shall have a maximum of sixty (65) days from the official submission date to the Board of Commissioners to approve, approve with modifications or disapprove the First Plat. If the Board of Commissioners gives approval subject to modifications or disapproval to the First Plat, the necessary reasons or modifications will be specified in the minutes of the meeting.
c. If the Board of Commissioners denies the approval of the First Plat, the applicant must wait six months from the date of denial before resubmitting a new Concept Plan.
d. Once the Board of Commissioners decision is filed, the applicant may begin working on the Construction Plan.

(6) Time limit on validity of First Plat approval

Approval of a First Plat shall be valid for a period of twelve (12) months following the date of approval by the Board of Commissioners. Approval shall remain valid provided the Construction Plan application is submitted during this time period. A one-year extension may be granted if the applicant demonstrates that delays beyond their control are responsible for the lapse and have the extension submitted and reviewed following the process outlined in Section 5.2(D)(4) prior to the expiration of approval. If First Plat approval expires the subdivision shall not be considered for construction approval until and unless another First Plat approval is granted according to applicable regulations and appropriate additional administrative fees are paid.

This time limit on the validity of First Plat approval shall not apply for Planned Unit Developments, also referred to as Planned Residential Developments, or subdivisions of 50 lots or more when a development schedule is submitted and approved. First Plat approval shall not expire for developments in these categories provided the development continues according to the overall phasing and time schedule established when First Plat is approved. The first phase of phased subdivision must submit Construction Plans within two (2) years of approval of First Plat. The Board of Commissioners can grant extension of one year for phases using the same criteria listed above.

(7) Deadline for Submission of First Plat

Applicant submits First Plat to Planning Department. This is to be received by the Planning Department at least forty-six (46) days prior to the Planning Board meeting, but not longer than six (6) months from the Environmental Resources Department report. The Planning Department staff can then postpone the request for up to one regular meeting. The application can be continued for one regular meeting, then the Planning Board will indicate their approval, disapproval, or approval subject to modification. Failure of the Planning Board to act on the First Plat within two meetings will be deemed a favorable recommendation for approval of the plat by the Planning Board.

Boards may call special meetings to accommodate heavy case loads in order to meet these deadlines.

First Plats shall be submitted to the Board of Commissioners for consideration at the next available regular meeting after the Planning Board has acted or its time to act has expired. The Board of Commissioners shall review the First Plat and indicate its

approval, disapproval or approval subject to modifications within sixty (65) days of the official submission date to the Board of Commissioners. Failure of the Board of Commissioners to act on the First Plat within sixty (65) days will be deemed approval of the plat as submitted. If the Planning Board or the Board of Commissioners disapproves or approves subject to modifications, the necessary reasons or modifications will be specified in the minutes of the meeting.

The approval of the First Plat by the Board of Commissioners serves as permission to begin acquiring permits according to the plans and as a basis for preparation of the construction plan.

(8) County review of water plans for acceptance into County system
Please see the Chatham County Water System Operating Policies for applicable rules and regulations.

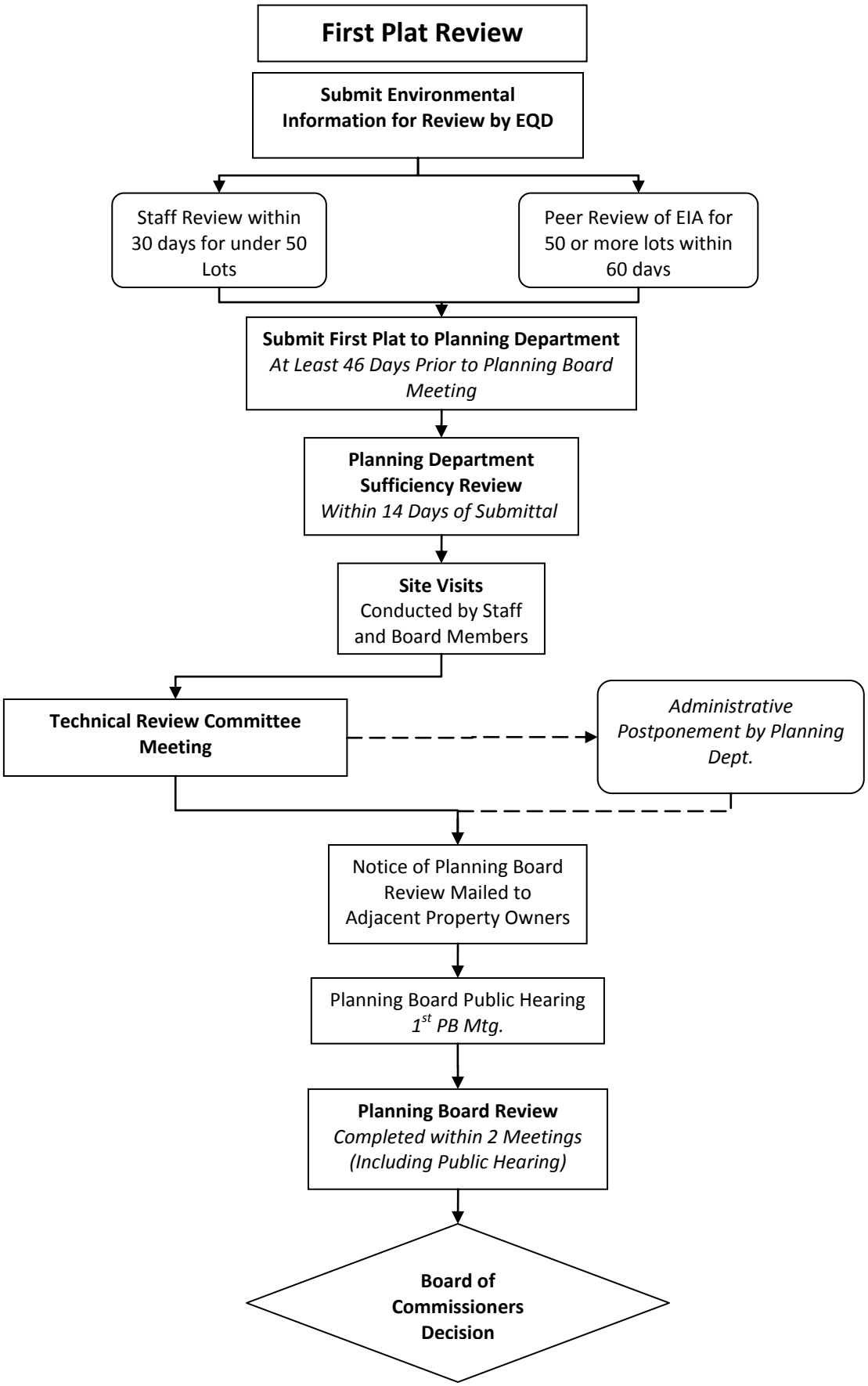

Figure 2. First Plat Review Process Diagram

D. Construction Plan

(1) Purpose

The construction plan review is required to properly identify the design standards for all public improvements and the layout of the development set forth in the First Plat are adhered to. This plan is used to begin construction of improvements.

(2) Additional Permits

The approved First Plat will be used to obtain any additional permits (Local, State and/or Federal) or approval letters that are required to obtain a valid Construction Plan. Approval is done by County Staff unless staff deems there are significant changes from the approved First Plat. The Staff shall approve the submitted Construction Plan or require approval of the Construction Plan by the Board of Commissioners if the following significant changes from the first plat are present:

- Increase in the number of lots by five percent (5%) or more
- Increase in the number of stream crossings
- Number of road lanes increases on any segment except where providing for turning, acceleration or deceleration lanes pursuant to recommendation of NCDOT
- Linear feet of road increases by five percent (5%) or more.
- Discovery of historically-significant structures or cemeteries after First Plat that may alter the overall design or layout of the subdivision.

If staff requires review of the Construction Plan by the Board of Commissioners due to significant changes, the Planning Board and Board of Commissioners will review the plan. Review of the Construction Plan by the Planning Board and Board of Commissioners shall follow the following process.

(3) Process for Construction Plan Review by Planning Department

a. The applicant shall submit the Construction Plan and all required permits to the Planning Department at least twenty-one (21) days prior to the Technical Review Committee meeting at which the Construction Plan will be reviewed.

b. The Planning Department shall have 14 days from the date of submittal to notify the applicant if the Construction Plan contains detailed supporting information that is sufficient to allow for review under these regulations, or if there are significant changes as defined in Section (2) above. If the Department determines that there are significant changes, the applicant shall follow the review process outlined in Section (4) below.

   (1) If the Planning Department determines the information is not sufficient for review, the Department shall notify the applicant of the specific information that is required for review.
   (2) The Planning Department shall take no further action on the Construction Plan until the applicant submits the required information.
   (3) Once the applicant corrects the identified deficiencies, the applicant shall resubmit to the Planning Department at least twenty-one (21) days prior to the next Technical Review Committee meeting, and the Department shall have 14 days to review the information and notify the applicant that the information is sufficient for review.
   (4) A determination that an application contains sufficient information for review as provided in this subsection (b) does not limit the ability of other county agencies to request additional information during the review process.

c. The Technical Review Committee shall review the Construction Plan for compliance with the approved First Plat and required permits.

d. Once the Technical Review Committee completes its review, the Planning Department shall notify the applicant of any required changes to the Plan or give the applicant notice to proceed.

e. If there are any changes required to the Construction Plan, the applicant shall re-submit the Construction Plan for review by the Technical Review Committee.

f. If the applicant wishes to appeal any decision by the Planning Department concerning the Construction Plan, the appeal shall follow the process outlined below in Section (4) for review by the Board of Commissioners.

(4) Process for Construction Plan Review by Board of Commissioners

If the Planning Department determines that the Construction Plan must be reviewed by the Board of Commissioners due to significant changes from First Plat, the following process shall apply.

a. The applicant shall submit the Construction Plan to the Planning Department no less than twenty-three (23) days prior to the Planning Board meeting at which the proposal will be reviewed.

b. The submittal is reviewed by the Technical Review Committee prior to the Planning Board meeting for comments and recommendations from other agencies.

c. Notice of the review shall be sent to the applicant and adjoining property owners as required in Section H below.

d. The Planning Department forwards the staff recommendation to the Planning Board and applicant.

e. The Planning Board shall review the Construction Plan and indicate their recommendation for approval, disapproval or approval subject to modifications. If the Board recommends disapproval or approval subject to modifications, the necessary reasons or modifications will be specified in the minutes of the meeting.

f. The Planning Board forwards the recommendation to the Board of Commissioners for review. The recommendation shall be submitted to the Board of Commissioners for consideration not later than thirty (30) days after the Planning Board has acted or its time to act has expired.

g. The Board of Commissioners shall review the Construction Plan and indicate approval, approval with modifications or disapproval of the Construction Plan. If the Board of Commissioners gives approval subject to modifications or disapproval to the Construction Plan, the necessary reasons or modifications will be specified in the minutes of the meeting.

(5) Deadline for Submission of Construction Plan for Board of Commissioners Review

If the Board of Commissioners is required to review the Construction Plan due to significant changes, the following apply. The Construction Plan shall be submitted twenty-three (23) days prior to the day on which approval is requested for subdivisions. Within sixty (60) days after the official submission date of the Construction Plan, the Planning Board will review it and indicate their recommendation for approval, disapproval, or approval subject to modification. Failure of the Planning Board to act on the Construction Plan within this sixty (60) day period will be deemed a favorable recommendation for approval. The Construction Plan shall be forwarded to the Board of Commissioners. The Board of Commissioners will review the Construction Plan and indicate their approval, disapproval, or approval subject to modifications within sixty (65) days of the official submission date to the Board of Commissioners. Failure of the Board of Commissioners to act on the Construction Plan within sixty (65) days will be deemed approval of the Plan as submitted. If the Planning Board recommends or the Board of County Commissioners gives disapproval or approval subject to modifications, the necessary reasons or modifications will be specified in the minutes of the meeting.

(6) Time Limit On Validity Of Construction Plan Approval

Approval of a Construction Plan shall be valid for a period of twenty-four (24) months following the date of approval by the Technical Review Committee or Board of County Commissioners unless a request for an extension has been submitted and reviewed following the process outlined in Section (4) above prior to the expiration of approval. Approval shall remain valid provided the Final Plat application is submitted during this time period. Upon expiration of Construction Plan approval, a Final Plat of the same subdivision shall not be considered by the Board of County Commissioners unless said Construction Plan (or First Plat, if necessary) is submitted for approval based on standards in effect at the time of resubmission.

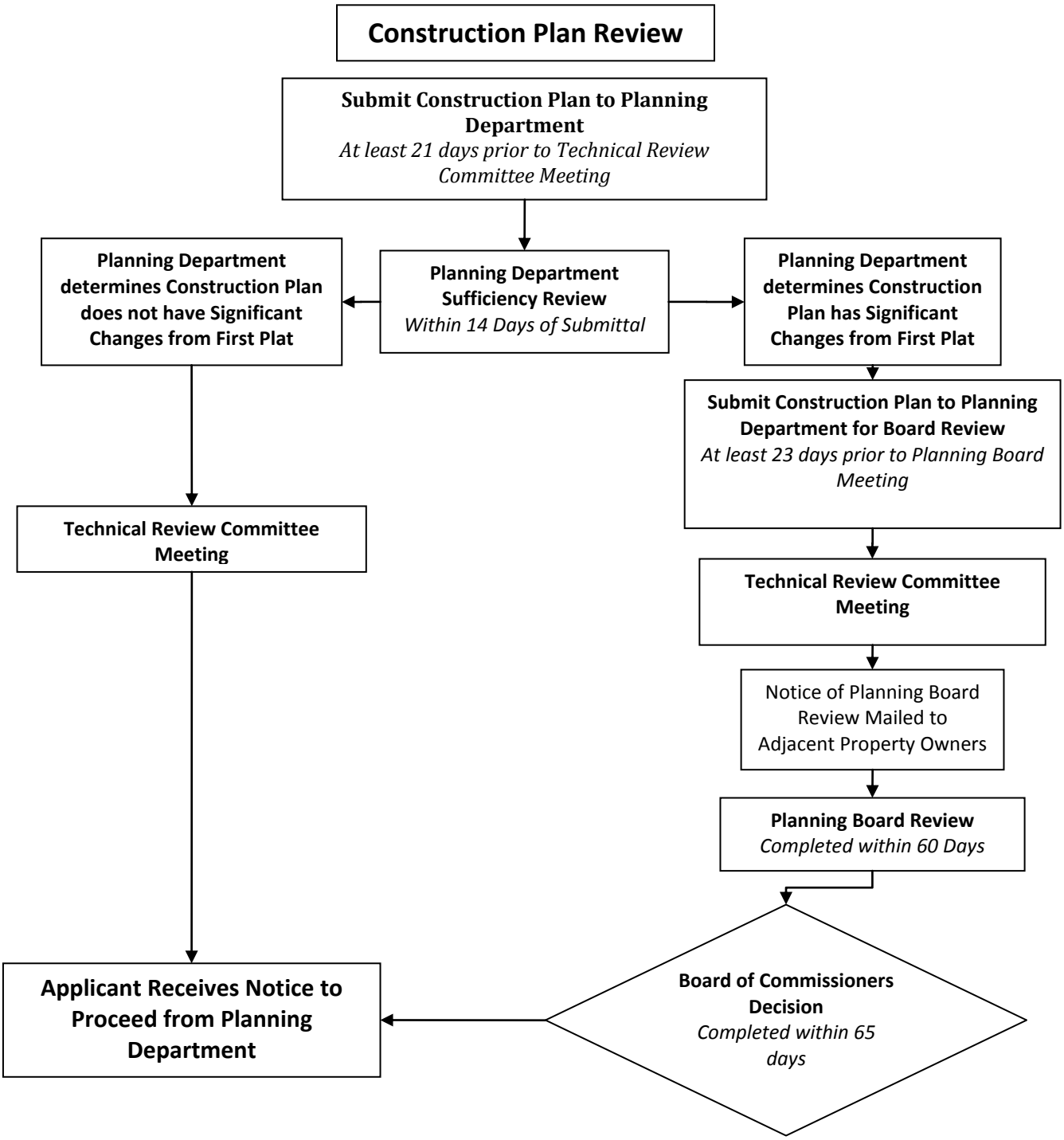

Figure 3. Construction Plan Process Review Diagram

E. Final Plat

(1) Purpose

The approved Final Plat, filed with the Register of Deeds, is the permanent record of the subdivision as constructed. It shows all property lines and other dimensions important for the accurate and legal transfer of property, and records the location of street lines, and easements.

(2) Preparation and Approval of Final Plat

The Final Plat shall be prepared in conformance with these regulations by a surveyor licensed in the State of North Carolina. Said plat may be submitted when the required improvements have been installed or appropriate financial assurance for completion of improvements has been filed. Applicants shall pay all required fees as established by the County. Review and approval of the Final Plat by the Planning Department shall follow the process outlined in Section (3) below. The Planning Department shall approve the Final Plat if it is in substantial conformance with the approved Construction Plan, and it shall be signed by authorized Planning Department staff. If the Planning Department determines that the Final Plat is not in compliance with the Construction Plan approval then this shall result in a denial of the Final Plat. Any decision by Staff can be appealed to the Board of Commissioners using the process outline in Section (F) below.

(3) Process for Final Plat Review by Planning Department

a. The applicant shall submit the Final Plat and all required certifications to the Planning Department at least twenty-one (21) days prior to the Technical Review Committee meeting at which the Final Plat will be reviewed.

b. The Planning Department shall have 14 days from the date of submittal to notify the applicant that the Final Plat contains detailed supporting information that is sufficient to allow for review under these regulations.

   (1) If the Planning Department determines the information is not sufficient for review, the Department shall notify the applicant of the specific information that is required for review.
   (2) The Planning Department shall take no further action on the Final Plat until the applicant submits the required information.
   (3) Once the applicant corrects the identified deficiencies, the applicant shall resubmit to the Planning Department at least twenty-one (21) days prior to the next Technical Review Committee meeting, and the Department shall have 14 days to review the information and notify the applicant that the information is sufficient for review.
   (4) A determination that an application contains sufficient information for review as provided in this subsection (b) does not limit the ability of other county agencies to request additional information during the review process.
   (5) If the Department determines during this review that the Final Plat does not substantially conform to the Construction Plan or these Regulations, the Department shall deny the Final Plat.

c. The Technical Review Committee shall review the Final Plat for compliance with the approved Construction Plat, required permits and certifications.

d. Once the Technical Review Committee completes its review, the Planning Department shall notify the applicant of any required changes to the Final Plat or give the applicant notice of approval.

e. If there are any changes required to the Final Plat, the applicant shall re-submit the Final Plat for review by the Technical Review Committee.

f. After approval of the Final Plat, the reproducible plat shall be returned to the subdivider for his/her records and for filing with the County Register of Deeds as the official plat of record. One copy of the plat exhibiting certifications shall be retained by the Planning Department for its records.

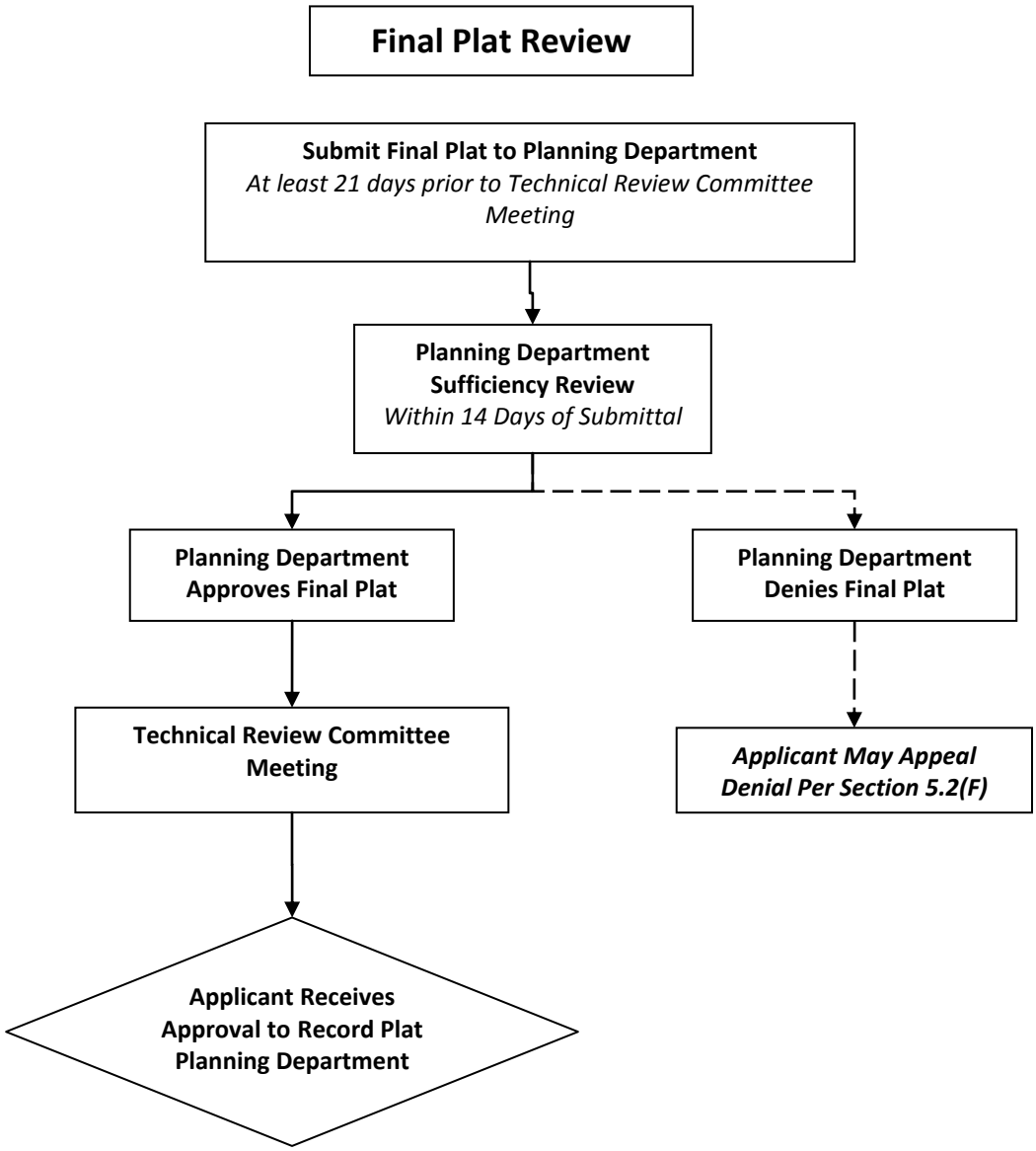

Figure 4. Final Plat Review Process Diagram

(4) Recording

The subdivider shall file the approved Final Plat with the Chatham County Register of Deeds for recording within sixty (60) days of the date of approval or such approval shall be null and void and the plat will be denied recordation, except as provided below. Final Plats not recorded in the Register of Deeds Office within sixty (60) days may be reviewed by the Planning Department for compliance with current regulations. Plats found to be in compliance may be approved by signature of the Planning Department authorized personnel, dated, and allowed to be recorded. Plats not in compliance shall not be approved by the Planning Department or recorded prior to review and approval outline in Section D(4).

F. Appeals

(1) The disapproval of a Final Plat by the Planning Department may be appealed to the Board of Commissioners if filed with the Planning Department within fifteen (15) days of notice of disapproval. The administrative fee for appeal is required in order to perfect the appeal. Any appeal shall follow the following process:

(2) The applicant shall submit the Final Plat to the Planning Department no less than twenty-three (23) days prior to the Planning Board meeting at which the proposal will be reviewed.

(3) The submittal is reviewed by the Technical Review Committee prior to the Planning Board meeting for comments and recommendations from other agencies.

(4) Notice of the review shall be sent to the applicant and adjoining property owners as required in Section H below.

(5) The Planning Department forwards the staff recommendation to the Planning Board and applicant.

(6) The Planning Board shall review the Final Plat and indicate their recommendation for approval, disapproval or approval subject to modifications. If the Board recommends disapproval or approval subject to modifications, the necessary reasons or modifications will be specified in the minutes of the meeting.

(7) The Planning Board forwards the recommendation to the Board of Commissioners for review. The recommendation shall be submitted to the Board of Commissioners for consideration not later than thirty (30) days after the Planning Board has acted or its time to act has expired.

(8) The Board of Commissioners shall review the Final Plat and indicate approval, approval with modifications or disapproval. If the Board of Commissioners gives approval subject to modifications or disapproval to the Final Plat, the necessary reasons or modifications will be specified in the minutes of the meeting.

(9) If the Final Plat is approved by the Board of Commissioners, the reproducible plat shall be returned to the subdivider for his/her records and for filing with the County Register of Deeds as the official plat of record. One copy of the plat exhibiting certifications shall be retained by the Planning Department for its records.

(10) If the Board of Commissioners is required to review the Final Plat due to substantial changes, the following applies: within sixty (60) days after the official submission date of the Final Plat, the Planning Board will review it and recommend its approval, disapproval or conditional approval. Grounds for disapproval or conditional approval shall be stated upon the records of the Planning Board. Failure of the Planning Board to act on the Final Plat within this sixty (60) day period shall be deemed recommendation of approval of the plat. Final Plats shall be forwarded to the Board of Commissioners. The Board of Commissioners will review the Final Plat and indicate their approval, disapproval or approval subject to modifications within sixty (65) days of the official submission date to the Board of Commissioners. Failure of the Board of Commissioners to act on the Final Plat within sixty (65) days will be deemed approval of the plat as submitted. If the Board of County Commissioners gives disapproval or approval subject to modifications, the necessary reasons or modifications will be specified in the minutes of the meeting.

(11) The disapproval of any plat by the Board of Commissioners may be appealed to the courts, following exhaustion of the review procedures specified herein.

G. Submission Dates

The official submission date shall be considered the date of the Planning Board or Board of Commissioners meeting at which a plat is considered for approval. This is not the date upon which the plat is submitted to the Planning Department for review.

H. Notice of Review

The Planning Department shall give reasonable notice of the time and place of any review by the Planning Board for major subdivisions. Notice shall also be given when a request is made for the extension of approval. Notice shall be sent by regular mail not less than fourteen (14) days prior to the date specified thereon and shall be mailed to the address of the adjacent property owners as specified on the plat or application. Failure to receive notice by the subdivider or adjacent property owners shall not be grounds for disapproval by the Board of Commissioners.

5.3 Minor Subdivisions

All subdivisions not classified as major subdivisions, including but not limited to subdivisions of five (5) or fewer lots, and not requiring any new street, nor the creation of any public improvements, nor the request for a variance.

Figure 5: OVERVIEW OF THE MINOR SUBDIVISION PLAT REVIEW PROCESS

1. Informal Consultation – Planning Board Staff
2. On-site riparian buffer determination, Erosion and Sedimentation Control Permit (including slopes review), and stormwater requirements.
3. Review by Chatham County Health Department Division of Environmental Health
4. Engineering and Surveying work as necessary
5. If necessary, road name approval by Emergency Operations Center and Board of Commissioners
6. Planning Staff Review
7. Record Plat

General Procedures

A. Minor Subdivisions may be submitted to the Planning Department for First Plat, Construction and Final Plat review simultaneously since there are no public improvements involved. Since minor subdivisions are easily reviewed by the Planning Department there is no deadline for submittal. The applicant shall submit the required number of prints of the plat to the Planning Department. Applicants shall pay any administrative fee established by the County at the time of the application or request. The staff shall inform the applicant of necessary modifications to the plat. Minor Subdivisions involving access to more than two lots shall have the access road name approved by the Emergency Operations Center (EOC) and Board of Commissioners.

B. Minor subdivisions shall be reviewed and approved by the Division of Environmental Health of the Chatham County Health Department or the Division of Environmental Management (issuance of a discharge permit and permit to construct.) This approval shall be in a form prescribed by the issuing agency.

C. The Planning Department shall review the plat and if everything is in order, the Director of Planning or his/her authorized agent shall approve the plat as a minor subdivision. (See Appendices)

D. The plat shall be submitted for recording by the applicant within the time limit specified in these regulations.

E. In order for a subdivision to be considered a minor subdivision the following requirements must be met:

(1) The subdivision must meet the requirements of the minor subdivision definition.
(2) The plat must meet all requirements and standards for Final Plats as required in section 6.4.
(3) There can be no variances requested from the subdivision regulations.

(4) There cannot be, as a result of such subdivision, a creation of any lots which fail to meet all requirements of the subdivision regulations.

(5) No subdivider may use the minor subdivision procedure in the same immediate location (approximately fifteen hundred [1,500] feet) for a period of twelve (12) months after getting subdivision approval using said procedure in said location, if he/she owns, has an option on, or has any legal interest in any property adjacent to the property to be subdivided, except as provided in these regulations, specifically in Section 7.4B(4). However, a subdivider may use the minor procedure more than once during a twelve month period to create as many as five (5) individual lots. The minor subdivision procedure may not be used to create more than five (5) lots unless there is a twelve month period after the approval of the fifth lot.

(6) Additional street right-of-way dedication shall be shown on the plat in cases where the existing right-of-way does not meet the present minimum right-of-way width.

(7) If a minor subdivision does not meet the above listed requirements it shall be reviewed as a major subdivision, unless otherwise provided.

F. Any appeals of a staff decision regarding a Minor Subdivision shall follow the process in Section 5.2(F).

SECTION 6 SPECIFICATIONS FOR DOCUMENTS TO BE SUBMITTED

6.1 First Plat

Plats submitted to the Planning Board shall be drawn to a convenient scale of not more than two hundred (200) feet to an inch when practical and shall show the following information. Documentation shall be submitted as double-sided copies whenever practical; a digital copy shall be submitted to the Planning Department.

A. Name

(1) Name of subdivision if property is within an existing subdivision.

(2) Proposed name if not within a previously plated subdivision. The proposed name shall not duplicate the name of any plat previously recorded.

(3) Name of property if no subdivision name has been chosen. (This is commonly the name of the property owner.)

B. Ownership

(1) Name and address, including telephone number, of legal owner or agent of property.

(2) Name and address, including telephone number, of the professional person(s) responsible for subdivision design, for the design of public improvements and for surveys.

(3) Citation of any existing legal rights-of-way or easements affecting the property.

(4) Reference to existing covenants on the property, if any.

(5) AKPAR Number

C. Description

Location of property by tax map and parcel number, when available. The Warranty Deed Book number and page on which the property is currently recorded, when available.

D. Features

The plat or application shall show the following information when available or note whether it is applicable.

(1) Location map showing relationship of the subdivision site to the surrounding area.

(2) Graphic scale, date, approximate North arrow, legend.

(3) The location of property with respect to the surrounding property and streets, the names of all adjacent property and streets, or the names of adjacent developments. The name and address of adjacent property owners according to the county tax records, which may be listed on a separate page from the plat. Property on the opposite side of an easement or public right-of-way shall also be considered adjacent property.

(4) Zoning Classification of proposed subdivision and adjacent property if applicable.

(5) The approximate location of all boundary lines of the property.

(6) Approximate total acreage of land to be subdivided in Chatham County, and other county if applicable.

(7) Approximate lineal feet of the proposed street.

(8) The approximate location of existing and platted streets, easements, water bodies, water courses and their associated riparian buffers (including sinkholes, dry stream beds, and pond overflow streams), railroads, parks, bridges, sewers, water mains, culverts, lands subject to flood and other pertinent features.

(9) The location and width of all existing and proposed street right-of-ways and easements, and other public ways, and riparian buffers, where applicable.

(10) The approximate location(s), type(s), and size(s) of all proposed stormwater devices and/or easements required by the Chatham County Stormwater Ordinance.

(11) The approximate location, dimensions, and acreage of all proposed or existing lots.

(12) The approximate location, dimensions and acreage of all property proposed to be set aside for a park or playground use, or other public or private reservation, with designation of the purpose thereof, and conditions, if any, of the dedication or reservation.

(13) Names of all streets existing and proposed.

(14) A notation on the use of any lots proposed for a use other than single family residential.

(15) All lots in each subdivision shall be consecutively numbered.

(16) A notation specifying that a public water system is not presently available to the subdivision.

(17) A time schedule of development for subdivisions of more than 50 lots.

(18) The approximate location of any significant cultural and/or historical sites as defined by NC Office of Archaeology, Department of Cultural Resources and/or Chatham Historical Association on the property.

(19) The approximate location and age of any existing buildings (including mobile homes), cemeteries, or historical structures greater than 50 years in age on the property.

(20) The approximate location of any cemeteries or historical structures located within 100 feet of the development on any adjacent property.

(21) Indicate whether a Non-Discharge Permit for a land application waste disposal system is necessary.

(22) Indicate whether a permit for any subsurface wastewater disposal system of 3000 gallons/day or larger is necessary.

(23) Indicate whether a 404 permit/401 certification is necessary.

(24) Indicate the water supply watershed district.

(25) Indicate any state designated Well Head Protection Areas.

(26) Indicate any element occurrences ("EO") of natural diversity, including rare species, as determined by and tracked by the NC Natural Heritage Program, NC Wildlife Resources Commission (WRC), and US Fish and Wildlife Service (FWS).

(27) Indicate any whether the property contains or is adjacent to (shares at least one boundary with) a Significant Natural Heritage Area (SNHA) as recognized by the NC Natural Heritage Program.

(28) Indicate whether the property is located within a designated 14 digit Hydrologic Unit drainage basin that supports aquatic species that are federally listed or listed as Federal Species of Concern.

6.2 Additional First Plat Information

A. Environmental Documentation

Any proposed subdivision of forty-nine (49) lots or less shall be required to submit Environmental Documentation to the County. The Environmental Documentation shall include the information required by the General Environmental Documentation Submittal Form developed by the Environmental Quality Department.

B. Environmental Impact Assessment

Pursuant to N.C. Gen. Stat. § 113A-8, the County requires the subdivider to submit an Environmental Impact Assessment for any proposed non-residential development project, excepting bona fide farm activities, of two contiguous acres or more in extent that disturbs two or more acres, or for any proposed residential development project of two contiguous acres or more in extent that will include fifty (50) or more dwelling units, whether detached or attached single family residences or in a multifamily structure or structures.

Development activities for which a detailed statement of the environmental impact of the project is required pursuant to N.C. Gen. Stat. § 113A-4(2) or 42 U.S.C. §4332(C), or for which a functionally equivalent permitting process is required by federal or State law, regulation or rule, are exempt from the requirement of Section 6.2 A. However, a copy of such any such statement of environmental impact shall be provided to the County.
The Environmental Impact Assessment document shall include the following information as applicable:

Proposed Project Description and Need

1) Describe the overall project in detail, including all proposed phases.
2) Provide a project location map showing surrounding areas.
3) Provide a project site plan showing existing and proposed facilities.
4) Describe how this project fits into larger plans or connects with adjacent projects.
5) List and describe any public facilities or public benefits provided by the project.

6) Discuss the land acreage to be disturbed during each phase.
7) List square footage and height (in stories) of new buildings.
8) Describe proposed uses of all buildings and proposed facilities.
9) Show number of parking spaces in parking lots and decks.
10) Show areas to be cleared, graded, filled, paved, and landscaped.
11) Show connections to existing utility and sewer lines or new utilities.
12) Show wastewater management systems on a map.
13) Show proposed areas of impervious and semi-pervious surfaces.
14) Show and describe any proposed stormwater control devices.

Alternatives Analysis

1) Discuss and compare all reasonable development alternatives (site selection, facility layout, utilities, stormwater management, construction methods, open space preservation, any other pertinent alternative considerations).
2) Discuss how the preferred alternative was selected and its benefits relative to other alternatives (including a no-build alternative, if applicable).

Existing Environment and Project Impacts

For each resource topic below, describe:

A. Existing resources and conditions.
B. Anticipated impacts (short-term construction impacts, long-term operation impacts, and indirect or secondary impacts).
C. Discuss how potential impacts to the resource will be avoided and minimized through alternative selection, design strategies, construction methods, and long-term maintenance procedures.
D. For unavoidable impacts, describe whether any compensatory mitigation is planned or required.

1) Geography
   - Discuss the geographic setting, geology, and topography of the project area and adjacent areas.
   - Provide a topographic map of the property and surrounding area, use the county GIS website topography (2’ contour interval) data at a scale appropriate for the project size, i.e., 1” = 100’, etc.).
   - Identify any 100-year floodplains (FEMA Special Flood Hazard Areas) on or adjacent to the property. If present, provide an appropriate-scale map of these flood-prone areas defined by the NC Flood Mapping Program.
   - Show areas that will be graded or filled, and provide estimated cut/fill volumes.
   - If the project includes pond or dam work, show areas that will be flooded.

2) Soils and Prime Farmlands
   - Identify dominant soils in the project area (County GIS or NRCS website) and show on a map.
   - Discuss any soil constraints (fill, wetland soils, septic suitability, slopes, etc.), and indicate those areas on a map.
   - Describe any soil disturbance or contamination expected as a result of this project.
   - If contamination is expected, discuss containment plans and procedures.
   - If soil will be relocated, specify the number of square yards/feet to be moved, and its relocation site.
   - Describe runoff management plans for the project.
   - If soil disturbance is proposed, describe the off-site impacts expected from this activity.

- Provide a map of any prime or unique farmland soils in the project or service areas, and include references used to make this determination.
- Describe impacts to prime or unique farmland soils, including acreage estimates of lost farmland soils and retained farmland soils.

3) Land Use
- Provide a map showing current use of land on the site and surrounding properties.
- Discuss how the current land use fits into the surrounding area (conservation, development, ecological function, etc).
- Provide the current zoning of the project site and the surrounding area.
- Discuss how the proposed uses fit into the intended land use of the area (conservation, development, ecological function, quality of life).
- Indicate whether zoning or local land use plans will need to be changed after project completion.

4) Wetlands
- Indicate whether wetlands are present, describe the basis for this determination and the identity of the person who made the determination.
- Show identified wetlands on a map, and describe all relevant details, such as acreage, types, delineation, function, etc.).
- If wetlands are to be filled, specify the number of acres that will be affected.
- List all required permits and permitting agencies.
- If any diversions/additions/withdrawals of surface water will affect wetlands, describe those activities.

5) Public Lands and Scenic, Recreational, and State Natural Areas
- Provide a map of County or municipal parks, scenic, recreational, or state natural areas (SNHAs, State or Federal Forests, etc.) on or adjacent to the site/project area.

6) Areas of Archaeological or Historical Value
- Discuss any archaeological or historical studies of the project location; provide relevant references.
- Describe and identify on a map any structures (i.e., walls, buildings, etc.) on the site and provide estimated ages of those structures.
- Describe all impacts to any archaeological or historical resources in the proposed project area.
- Describe plans for demolishing or rebuilding any structures.
- Provide photographs of any significant resources, including all structures older than 50-years.
- Provide relevant correspondence with the Chatham County Historical Association and NC SHPO.

7) Air Quality
- Describe the project's impacts on ambient air quality.
- Describe plans for any open burning during or after construction.
- Indicate the number of proposed parking spaces, if applicable.
- Describe whether the project will increase odor levels, or the likelihood of odor complaints.
- Provide a copy of any required traffic studies.

8) Noise Levels

- Discuss current noise levels; use a benchmark, if possible.
- Describe any increases in noise levels expected from this project.
- Specify the distance at which the increased noise will be heard.
- Discuss whether surrounding properties will be affected by noise levels.
- If commercial uses are proposed, specify the hours of operation.

9) Light Levels
   - Describe lighting plans for the project, including how lighting will impact adjacent residents and wildlife.

10) Surface and Groundwater Resources (discuss separately)
   - Identify and provide a map of surface waters in the project area. Describe groundwater (aquifers) in the project area.
   - Include names, locations, classifications, and use support ratings for surface waters.
   - Specify and show on a map the river basin in which the project is located.
   - Discuss any known groundwater quality issues.
   - Discuss drinking water sources.

11) Fish and Aquatic Habitats
   - Describe fish and aquatic habitats in and adjacent to the site/project area.
   - Discuss impacts to fish and aquatic life and their habitats, including a map showing those habitats.

12) Wildlife and Natural Vegetation
   - Describe and provide a map of natural community types on and adjacent to the site/project area.
   - List the species of dominant plants and animals observed on the site that typify those communities.
   - Evaluate and discuss whether suitable habitat exists for rare, threatened, and/or endangered species, as described by the NC Natural Heritage Program.
   - If wildlife will be displaced, discuss any limitations of adjacent areas to support them.
   - Identify, list, and describe the distribution of the invasive species present on the site. Consult the NC Botanical Garden's Web page, "Plants to Avoid in the Southeast US" for a list of invasive species common to the region.
   - If forests will be cleared, discuss the extent of planned deforestation and specify the forestry methods to be used, including BMPs.

13) Hazardous Materials
   - List all hazardous materials to be stored or introduced during construction or operation.
   - For each hazardous material, other than in deminimis quantities or for routine housekeeping purposes, describe the procedures to be used to ensure their proper management, storage, and disposal.

<u>References</u>

<u>Exhibits (Maps, Figures, Tables, Photos, etc.)</u>

<u>State and Federal Permits Required</u>

C. Topographic Map
A topographic map with contours at vertical intervals of not more than five (5) feet, at the same scale as the First Plat, for all major subdivisions unless not deemed necessary by staff. Staff may require a topographic map for other subdivisions if necessary for adequate review. The date and method of preparing the topographic survey shall be stated.

D. Soils Evaluation
A soils evaluation shall be performed by a certified/licensed soil scientist or persons approved by the Health Department to perform such evaluations or investigations. Such evaluations shall be performed unless a central sewage disposal system is proposed. A soils map showing the location of suitable soils and a letter of explanation shall be submitted to perform such evaluations or investigations.

E. Utility Plans
Plans of proposed utility layouts for sewer and water where applicable, showing feasible connections to the existing utility system, or any proposed utility system.

F. U.S. Army Corps of Engineers and Division of Water Quality Permits or Certifications
Indicate if US Army Corps of Engineers and/or NC Division of Water Quality permits or certifications will be required. These permits and/or certifications may be required when development improvements may involve the placement of excavated material or fill material into streams, creeks, lakes, or wetlands. If any of these permits or certifications will be required, copies of the approved permits shall be submitted at time of Construction Plan submittal.

6.3 Construction Plan

The construction Plan shall include all the information required to be shown on the First Plat (see Section 6.1). The Construction Plan shall be drawn to a convenient scale of not more than two hundred (200) feet to an inch when practical.

6.4 Final Plat

A. General
The Final Plat shall conform substantially to the First Plat and Construction Plan as approved, and, if desired by the subdivider, it may constitute only that portion of the approved First Plat which he/she proposes to record and develop at the time, provided, however that such portion conforms to all requirements of these standards.

B. Features
The Final Plat shall show the following information:

(1) The Final Plat shall be drawn to an appropriate scale of not more than one (1) inch equals two hundred (200) feet on sheets having an outside marginal size of not more than twenty-four (24) inches by thirty-six (36) inches. When more than one sheet is required, an index sheet of the same size shall be labeled showing the entire subdivision with the sheets lettered in alphabetical order as a key, or the location map shall show the relationship of the separate sheets.

(2) Location map showing relationship of the subdivision to the surrounding area.

(3) Graphic scale, date, and north arrow accurately positioned and designated as
a. magnetic north,

b. true north, or
c. North Carolina grid north.

(4) Name, and address of owner and person responsible for plans.

(5) The location of the property with respect to surrounding property and streets, the names of all adjacent owners of record or the names of adjacent developments; and the book and page number of recordation, and the name and/or number of adjacent streets. Property on the opposite side of an easement or public right-of-way shall also be considered adjacent property.

(6) The total acreage of land to be subdivided in Chatham County. If less than one (1) acre, the square footage of each lot and if one (1) acre or greater the acreage of each lot.

(7) All lots in each subdivision shall be consecutively numbered throughout the several additions if there exists more than one.

(8) The location, and width of all existing and proposed right-of-ways and easements, alleys, and other public ways, and riparian buffers if applicable. Septic system easements shall show bearings, distances, and area.

(9) All streets shall be named and designated as either public or private.

(10) The location, dimension and area of all property proposed to be set aside for park or playground use, or other public or private reservation, with designation of the purpose thereof and conditions, if any, of the dedication or reservation.

(11) The approximate location of any buildings or structures that will remain.

(12) The approximate location of any cemeteries, with access provided from the nearest public road.

(13) Accurate description of all monuments and markers. Monuments and control corners shall be designated.

(14) Sufficient data to determine readily the location, bearing, and length of all lines, and to reproduce such lines upon the ground; the location of all proposed monuments. This shall include but not be limited to (a) radius, (b) length, (c) cord bearing and distance.

(15) Any other information required on surveys as specified by the North Carolina State Board of Registration for Professional Engineers and Land Surveyors in its Manual of Practice for Land Surveying in North Carolina.

(16) When available the tax map and parcel number of the property being subdivided and the AKPAR #.

(17) When appropriate major subdivisions shall contain a note which states that a public or community water system is not presently available to the subdivision lots.

(18) Certificate of Ownership and Dedication (See Appendices).

(19) Certificate of Survey and Accuracy.

(20) Certificate of Division of Highways (See Appendices).

(21) Certificate of Approval by the Planning Board or authorized person (See Appendices).

(22) Certificate of the Register of Deeds.

(23) On a Final Plats which show new publicly dedicated roads, a note shall be placed designating maintenance responsibility until acceptance of said roads by the Department of Transportation. The maintenance responsibility for private roads shall be disclosed by a note on the plat.

(24) Soil Scientist final Certification

(25) Name of Subdivision

C. As-Built Utility Plans

When public or community water and/or sewage systems are installed as-built drawings of said systems shall be submitted at the time of final review or prior to the release of a financial guarantee by the County.

SECTION 7 REQUIREMENTS AND MINIMUM STANDARDS FOR IMPROVEMENTS, RESERVATIONS, AND DESIGN

7.1 Suitability of the Land

A. Land Areas Unsuitable for Development

If review agencies have found areas of land which do not or cannot meet the requirements of these and other regulations, the areas of land may not be approved for subdivision unless adequate methods are formulated by the developer for meeting the regulations.

B. Land Subject to Flood

Refer to the Flood Damage Prevention Ordinance. The 100 year floodplain (Special Flood Hazard Area) and floodway shall not be included when calculating the minimum useable lot area.

C. Land Subject to Erosion

Refer to the Soil Erosion and Sedimentation Control Ordinance.

D. Riparian Buffers

Riparian buffers are natural vegetated areas that provide a protective distance between a seep, spring, stream, perennial water body or wetland and an adjacent land area. Riparian buffers shall be provided in conformity with the requirements of the Chatham County Watershed Protection Ordinance. The riparian buffer areas and the water features to be buffered shall not be included when calculating the minimum useable lot area.

7.2 Rural Roads

A. Classification

Streets and roads are hereby classified according to the function which they are to serve, the type, speed, and volume they will carry. The broad categories shall be (a) arterials, (b) collectors, and (c) local roads. The designation in a transportation plan of arterials and collectors does not prevent other streets proposed in or adjoining subdivisions from being similarly classified. Classifications of rural roads are defined Section 2.

B. Relation to Present, Proposed and Future Road System

(1) The location and width of all streets and roads shall not be in conflict with any adopted Chatham County transportation plan. When a subdivision is proposed in an area designated for a future right-of-way on any County transportation plan and the construction of a road along this right-of-way is not necessary for the purpose of providing access to platted lots, or carrying the traffic that will be generated by the subdivision development, the construction of this road by the subdivider shall not be required. Such right-of-way shall, however, be reserved for dedication to the N.C. Department of Transportation for the purpose of implementing any transportation plan.

(2) For the purpose of these design standards, existing streets which terminate at or adjoin a subdivision boundary shall be deemed a part of the subdivision. The proposed street system shall extend the right-of-way of existing streets at no less width than the required minimum width. Subdivisions that adjoin only one side of existing streets shall dedicate one-half of the additional right-of-way needed to meet minimum width requirements. If any part of the subdivision includes both sides of an existing street all the required additional right-of-way shall be dedicated.

(3) Where necessary to provide public street access to adjoining landlocked property or connectivity to large tracts with future development potential, proposed public streets shall be extended by dedication of right-of-way to the boundary of such property. Legal documents shall be recorded assuring future public accessibility. Two of the issues to be reviewed when considering the extension of public roads are the improvement of traffic distribution to prevent unnecessary congestion and the improvement of public safety by providing increased access for law enforcement and emergency vehicles. When developments are proposed with private gravel roads, the Board of Commissioners may require said roads right-of-ways be reserved to adjacent properties where deemed appropriate for future access. The future disposition of said right-of-ways is left to the discretion of the owners of the development.

If the proposed public street to be extended is to be used as access for any lots, such stub street will be required to provide a temporary turn around, located within the public right-of-way and/or a dedicated easement, and in accordance with the standards shown either for cul-de-sacs in section 7.2C or for turnarounds in section 7.4B(3) and figure 8. See Form 14 for a note to be included on the plat.

(4) When an arterial adjoins or is included in a subdivision, lots therein which abut the arterial shall have the number of access points limited or reduced with such conditions specified on the plat or shall be provided with another means of access, e.g.- (1) platting a single tier of lots which back to the arterial and front on a minor street, or (2) other method approved by the Planning Board such as a frontage road.

(5) When land is subdivided into larger parcels than ordinary building lots, such parcels may be required to be arranged so as to allow for the opening of streets in the future and for logical further re-subdivision.

C. Design Standards for Roads

(1) General

Except as specified in these regulations all streets in subdivisions shall be public. The design and construction of all public streets and roads, including the grading, roadbed, shoulders, slopes, medians, ditches, drainage, driveway entrances to lots, right-of-way and pavement widths, grades, curves, intersections and other proposed features shall conform to the respective current standards of the North Carolina Department of Transportation Division of Highways, except as provided. The minimum cul-de-sac pavement radius for curb and gutter section and shoulder section is 40 feet. The minimum right-of-way radius for curb and gutter section and shoulder section is 55 feet. The roadway into the cul-de-sac shall remain unobstructed.

(2) Impervious Surface Area

All subdivisions shall comply with applicable watershed and stormwater regulations.

(3) Reserve Strips

There shall be no reserve strips controlling access to public streets except where the control of such strips is placed with the community under conditions approved by the Board of Commissioners.

(4) Street Names

Proposed streets which are obviously in alignment with others already existing and named shall bear the names of existing streets. In no case shall the name for a proposed street duplicate any existing street names in Chatham County or the towns therein, irrespective of the use of the suffix street, avenue, boulevard, road, pike, drive way, place, court, or other derivatives.

(5) Offer of Dedication

A developer of roads in subdivisions that are to be public roads shall provide an irrevocable offer of dedication prior to Final Plat approval.

D. Private Road

(1) Private roads may be allowed in the following types of developments:

a. Developments which due to the very nature of their design could not occur if required to meet the requirements for subdivision roads by the Division of Highways. Such developments include conservation subdivisions, mobile home parks, apartment complexes, and planned unit developments.

b. The division of land into tracts which are on the average five (5) acres or greater in size with no tract less than three (3) acres. The acreage of a tract is determined by the area located within lot lines. Tracts larger than ten (10) acres will not be included when calculating the average lot size of the subdivision. All land within the lot lines except public right-of-ways may be included in the lot area.

(2) Private Roads may be allowed when the following conditions exist.

a. The subdivision does not include any part of a proposed thoroughfare or street shown on the Chatham County Thoroughfare Plan; and

b. The developer shall reference on the Final Plat the recording of a roads instrument that provides the following:

i Guarantees full right of access via any private road in the subdivision to any lot served by that road.

ii Specifies the standards to which private roads in the subdivision have been designed and constructed.

iii Affirms the developer's responsibility to maintain the private roads in the subdivision to the specified standards until such responsibility is formally transferred to a legally constituted association of subdivision homeowners.

iv Includes a road maintenance agreement which at a minimum establishes the following:

- *a legally constituted association of subdivision homeowners with specified authority to set and collect fees from members for road maintenance purposes*
- *a sinking fund for emergency repair and long range improvement of subdivision roads*
- *an association decision-making process*
- *an association road maintenance policy with related standards.*

v If a large lot subdivision has 24 or less lots and the road is to be paved then it shall be constructed to state standards although not designed to state standards.

vi If there is an established (prior to subdivision) 60 foot wide easement to adjacent land on property and the developer proposes to use the easement as the road of access, then the road shall be designed and built to state standards.

(3) Design and Construction Standards for Private Roads:

Standards proposed for such developments as mobile home parks, apartment complexes, and planned unit developments shall be reviewed by the Board of Commissioners based on the type of requirements necessary for the development. Low density developments (as specified in D(1)b above) with private roads shall meet the following requirements:

a. The minimum width of right-of-ways shall be sixty (60) feet. Where necessary for adequate drainage additional right-of-way may be required.
b. The travel way width shall be not less than eighteen (18) feet, shall be unobstructed, and at a minimum shall be constructed to the design specifications shown in figure 6.
c. The ditch slope shall be established according to best management practices which deter erosion.
d. Cut and fill slopes shall be established to maintain stability and provide for maintenance where necessary.
e. The maximum grade of the travel way shall be ten (10) percent. Grades at stop intersections shall not be greater than four (4) percent for a distance not less than fifty (50) feet from the intersection of right-of-ways.
f. Private roads that are cul-de-sacs shall have an adequate turn around which has a road bed with a radius not less than forty (40) feet. The radius of the right-of-way of the turn-around shall not be less than fifty-five (55) feet. The roadway into the cul-de-sac shall remain unobstructed.
g. Sight distance easements at the intersection of private roads with public state maintained roads shall be equal to or greater than those required by the Division of Highways.
h. Drainage and erosion control measures shall be equal to those required for public roads.
i. All roads which will provide direct or indirect access to twenty-five (25) or more subdivision lots shall be designed to meet N.C. Division of Highways' standards for subdivision roads, and travel ways shall be constructed to said standards.

(4) Certification of Private Roads

The design and construction of private roads shall be certified to be in compliance with these regulations by a licensed engineer.

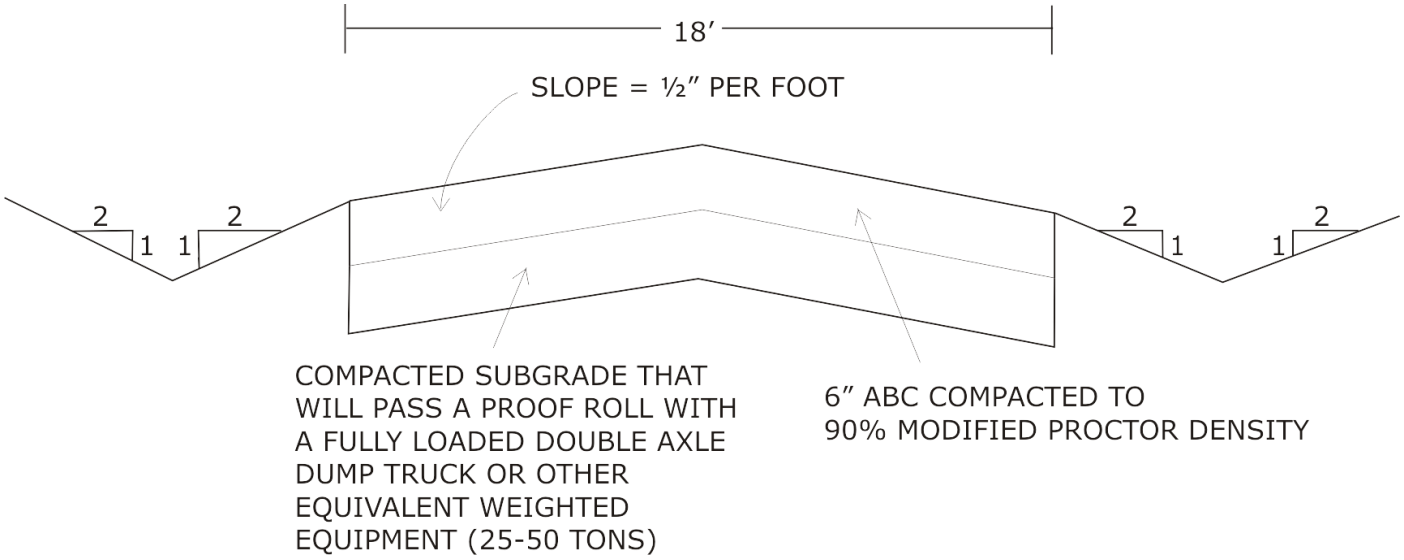

Figure 6: Minimum 18′ Gravel Road Standard

7.3 Blocks

A. Length

Maximum block lengths will vary by zoning district, but are geared toward creating a connected street network that accommodates bicycle and pedestrian scale connections. Minimum block lengths are limited only by safety concerns such as sight distance and throat length, and by other provisions of this ordinance such as lot width.

District (s) or Density for Residential	Maximum Block Length (includes cul-de-sac length)
More than 8 units units/acre net density (site acres minus open space & natural space)	480’
3 to 8 units/acre net density (site acres minus open space & natural space)	660’ (one eighth mile)
Compact Community	660’ in developed areas, 1320’ through intervening open space
O&I, B-1, NC, CB, RB	660’ (one eighth mile)
IL, IH	1320’ (one quarter mile)

In blocks greater than six hundred and sixty (660) feet in length (or at the end of cul-de-sacs) the Board of Commissioners may require at locations it deems necessary one (1) or more public pedestrian through accesses of not less than ten (10) feet in width to extend entirely across the block, or pedestrian easements in lieu thereof. Blocks are allowed to exceed maximum length where environmental conditions make connections infeasible.

B. Width

Blocks shall be wide enough to allow two (2) rows of lots, except where reverse frontage on major streets is provided or where prevented by topographic conditions or size of the property or location next to an arterial, in which case the Board of Commissioners may approve a single row of lots.

7.4 Lots

A. Adequate Building Sites

Each lot shall contain a building site suitable for habitation as defined in 7.1, Suitability of the Land.

B. Arrangement

Insofar as practical, side lot lines shall be at right angles to straight street lines or radial to curved street lines. Every lot shall have frontage on a public street except as provided below.

(1) Subdivision lots may be allowed provided that every lot has frontage on a private road as specified in 7.2.

(2) One additional subdivision lot may be allowed provided that the lot has frontage on a perpetual easement or private road that extends to meet a public road, if the easement or private road existed prior to October 1, 1975. Proof of the

existence of said easement prior to said date and proof of its permanence shall be provided to the Planning Director and certified by the applicant's attorney. A subdivider shall not create any subdivision in the same immediate location that has this type of frontage, for a period of twelve (12) months after receiving approval of a subdivision with this type of frontage, if he owns, has an option on, or has any legal interest in any property adjacent to the property to be subdivided. The road shall be widened to 22 feet for a distance of 40 linear feet to provide a pull-out for safe passing and only applies to the newly created lot (see figure 9 for an example of a pull-out). The pull-out shall be constructed prior to obtaining a signed plat and the design and construction of the road shall be certified to be in compliance with these regulations by a licensed engineer.

Both the additional lot and the remaining parcel if ten (10) acres or less in size shall be plated and approved.

(3) Up to four (4) subdivision lots may be allowed provided that every lot has frontage on a perpetual easement not less than thirty (30) feet in width that meets a public road. If additional subdivision lots are to be created and served by the easement, it shall be sixty (60) feet in width and meet other standards required unless a variance is granted. Proof of the permanence of the easement shall be provided to the Planning Director and shall be certified by the applicant's attorney. The applicant shall contact the State Department of Transportation to determine if a driveway permit is needed and shall provide proof of such to the Planning Director.

Easements serving one lot shall be improved such that the road has a minimum clearance of 12 feet wide and 14 feet high and an all weather travel surface. Such improvement shall be made prior to the occupancy of any dwelling on said subdivision lot. Easements serving more than more one lot shall be improved such that the road has a minimum unobstructed clearance of 12 feet wide and 14 feet high, have an all weather travel surface, and at a minimum be designed to the specifications in figure 7.The design and construction of the private road shall be certified to be in compliance with these regulations by a licensed engineer. If the length of the road is more than 250 feet, then a turnaround shall be provided at the end of the road within the easement. Options for acceptable turnarounds are shown in Figure 8 below. If applicable, one or more legs of the turnaround may be the entrance to a private driveway, provided that the minimum dimensions of the turnaround are accommodated entirely within the easement. Additionally, for roads that are more than 500 feet in length, the road shall be widened to 22 feet wide for a distance of 40 linear feet to provide a pull-out for safe passing, at a maximum interval of 500 feet as measured from the center of the pull-out. The maximum distance between the turnaround and a pull-out shall be 500 feet. See Figure 9 below for an illustration of pull-outs for private roads. Such improvements shall be made prior to the issuance of a building permit for a building on said subdivision lot. See Form 13 for a note to be included on the plat.

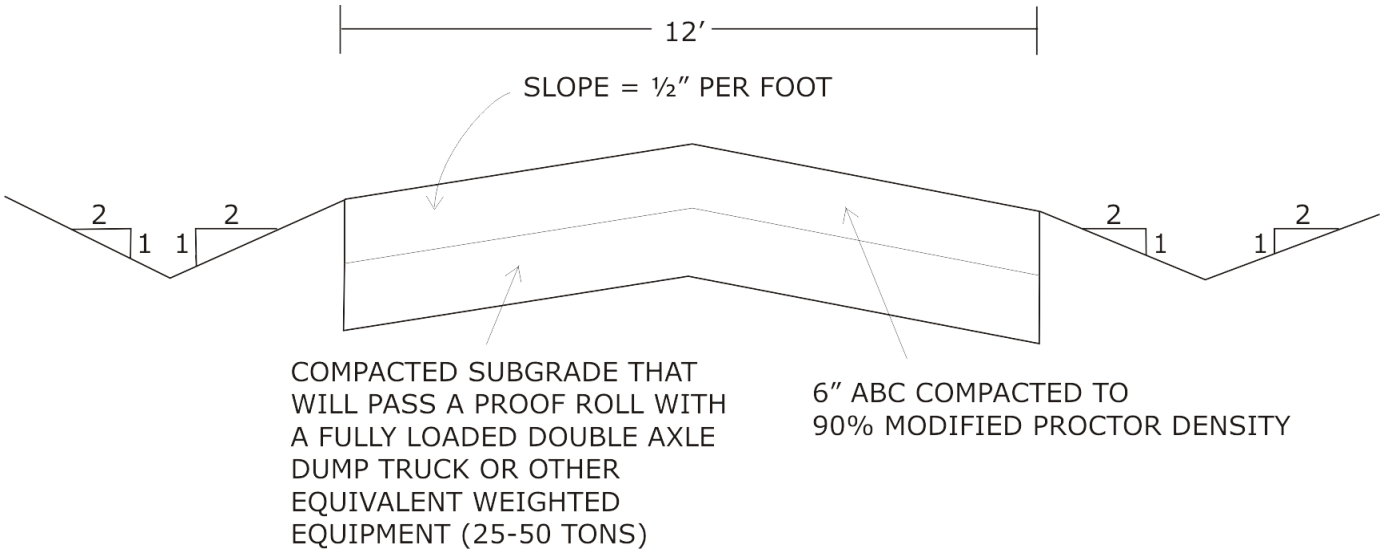

* Must follow entire length of roadbed and the design and construction of private roads shall be certified to be in compliance with these regulations by a licensed engineer per Section 7.2.D

Figure 7: 12′ Minimum Gravel Road Standard

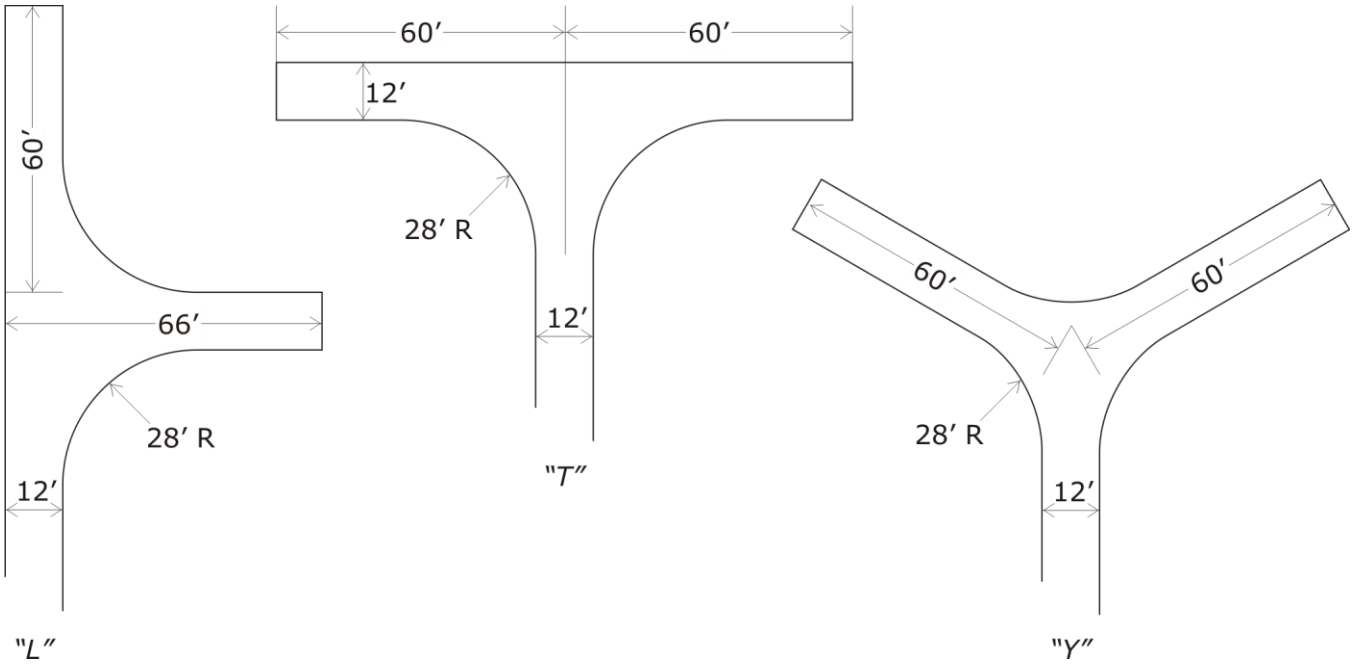

* Must follow construction of entire length of roadbed and construction of private roads shall be certified to be in compliance with these regulations by a licensed engineer per Section 7.2.D

Figure 8. Options for Turnarounds for Private Travelways

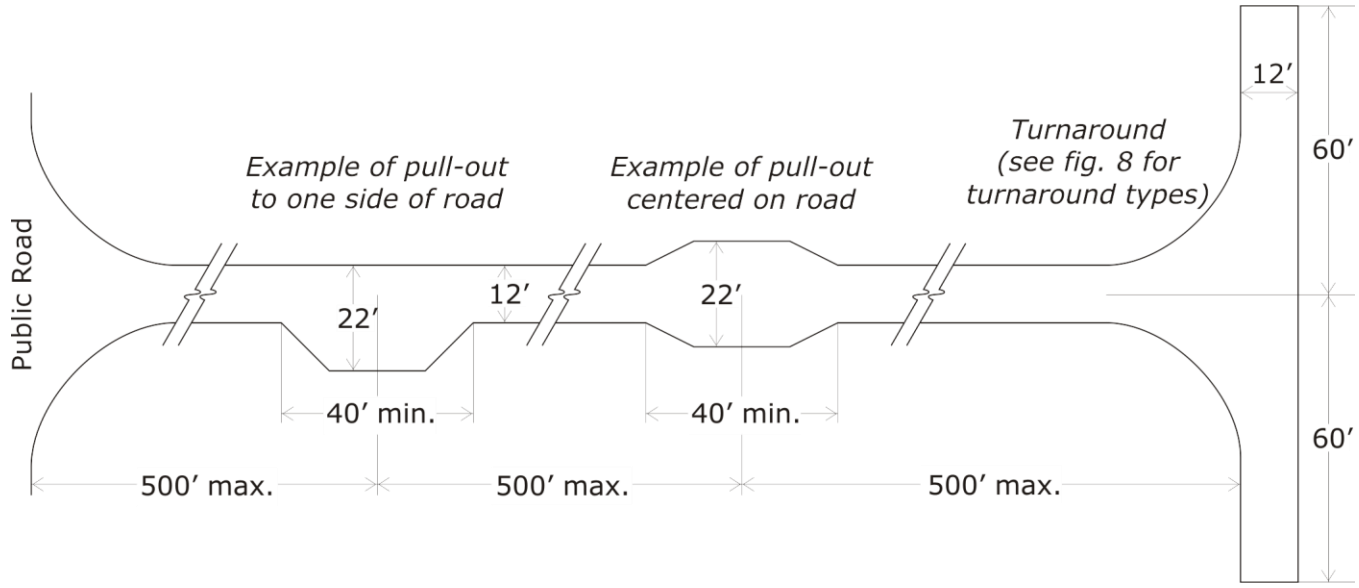

*Additional pullouts must meet gravel detail (see Figure 7) and construction of private roads shall be certified to be in compliance with these regulations by a licensed engineer per Section 7.2.D

Figure 9. Illustration of Pull-outs for Private Travelways

(4) Lots designated for duplex development (two family dwellings) or other attached residential units may be divided provided:

a. they meet the provisions of 7.4C (2)
b. access from each unit to a public or private road as specified herein or to a previously platted and recorded sixty foot perpetual easement is had by an easement not less than ten feet in width.
c. the total number of units allowed on said lots is not increased by said subdivision.

(5) The types of lot arrangements described in (2), (3), and (4) above may be reviewed according to the minor subdivision procedure described in SECTION 4B and 5.3, Minor Subdivisions. The lot arrangements described in (4) may follow the minor subdivision procedure with no limit on the number of lots or times the procedure may be used in this situation.

(6) Before additional lots may be created along a private road that was created after October 1, 1975 said lots must front on a public or private road as specified in these regulations unless said lots fit in one of the categories listed above.

C. Minimum Lot Dimensions and Areas

The size, shape and orientation of lots shall be such as the Board of Commissioners deems appropriate for the use contemplated, type of water supply and sewage disposal services, soil characteristics, improvements, and relation to the street system.

(1) Residential lots

Residential lots, unless developed as a Conservation Subdivision, shall meet the following minimum requirements:

Useable

Increase minimum lot size requirement for lots with individual wells and individual wastewater disposal systems from approximately 1 acre (40,000 square feet) to 1.5 acres (65,340 square feet).

Table 1: Residential Lot Frontage and Size Requirements

Classification of Street Access	Frontage on Street of Access	Lot Width at Building Line	Useable Lot Area with Public Water & Sewer (sq. feet)	Useable Lot Area without Public Water or Sewer (sq. feet)*	Useable Lot Area without Public Water and Sewer (sq. feet)**
Major Arterial	300'†	75'	40,000	40,000	65,340
Minor Arterial and Major Collector	150'†	75'	40,000	40,000	65,340
Minor Collector	100'	75'	40,000	40,000	65,340
Local Road	30'	75'	40,000	40,000	65,340

**For residential lots not served by a public sewage system greater lot area may be required for private sewage disposal if, in the opinion of the County, there are factors of drainage, soil conditions or other conditions to cause potential health problems.*
***Lot(s) served by a private source of water (wells) and individual sewage disposal systems shall have a lot width in an area suitable for building not less than one hundred (100) feet.*
†Access not recommended

The frontage on street access for major and minor arterials and collectors may be reduced if the average lot frontage equals or exceeds the minimum and the reduction is not less than one third (1/3) the minimum specified.

Flag lots may have the minimum road frontage reduced but not below the minimum requirement for local roads and the minimum flag pole width shall be no less than 30 feet and must run the entire length of the easement. The flag pole is the narrow portion of the lot that provides access from the road to the main body of the lot.

There shall be no more than two flag lots adjacent to each other unless an easement is provided allowing one common access and such is approved by the Board of Commissioners. The maximum allowed length of a flag or access strip shall be two thousand five-hundred (2,500) feet unless it is providing access to previously landlocked property. Corner lots may be required to have greater area to allow for sight easements required by the Division of Highways.

Lots that have frontage along the rivers of the county shall have a minimum land area of five acres of which three acres shall be outside the 100 year flood plain area and the riparian buffer area.

(2) The lot areas listed above shall be doubled in size for a two family dwelling. Said lots may be subdivided in order for each unit of the duplex to be situated on a separate lot, provided that each lot consists of not less than one half (1/2) the required lot area.

(3) Properties reserved or platted for commercial, institutional or industrial purposes shall be adequate in size to provide for the type of use and

development contemplated. Platting of individual lots should be avoided in favor of an overall design of the land to be used for such purposes.

Land shall not be platted for commercial, institutional or industrial purposes unless the subdivider can demonstrate the following; provided however these provisions shall not apply to bona fide farm activities:

a. A site arrangement that prevents undue interference with through traffic. (Each industrial subdivision or area shall utilize a single collector for all heavy traffic between the area and the general system of streets and roads. Minor industrial streets and individual industrial parcels shall be oriented at right angles with the collector and with adjacent railroads.)
b. An integrated parking area.
c. Spatial, structural, or vegetative buffers, or combination thereof against any adverse effect on any present or future adjacent residences.
d. A parcel size sufficient in area to allow future expansion.
e. A stormwater plan pursuant to the Chatham County Stormwater Ordinance.

(4) A comprehensive multi-family, group housing, or other unified and planned development, including unified design and construction of units together with necessary drives and ways of access, may be approved by the Board of Commissioners although the design of the project does not include standard streets, lots, and subdivision arrangements, if departure from the foregoing standards can be made without destroying their intent.

7.5 Public Use and Service Areas

A. Public Use Areas

(1) Reservation of School Sites

This ordinance provides for the reservation of school sites in accordance with the approved Land Development Plan. Before approving such a plan, the Board of Education and Board of Commissioners shall determine jointly the specific location and size of each school site to be reserved and shown as part of the plan.

Whenever a subdivision that included part or all of a school site to be reserved under the plan is submitted for approval, the Board of Commissioners shall immediately notify the Board of Education. The Board of Education shall promptly decide whether it still wishes the site to be reserved and shall notify the Board of Commissioners or planning agency of its decision.

If the Board of Education does wish the site to be reserved, the subdivision may not be approved without the reservation. The Board of Education must acquire the site within 18 months after the date the site is reserved, either by purchase or by exercise of the power of eminent domain. If the Board of Education has not purchased the site or begun proceedings to condemn the site within the 18 months, the subdivider may treat the land as freed of the reservation.

(2) Recreation Sites

All residential subdivisions shall provide public community recreation areas consistent with County plans, policies, and regulations including, but not limited to, the Chatham County Parks and Recreation Master Plan. For purposes of this section, public community recreation areas shall be areas developed for active recreational uses. The following are illustrative of the type of facilities that shall be deemed to serve active recreational needs: tennis courts, swimming pools, sauna and exercise rooms, meeting or activity rooms in clubhouses, basketball courts, ball fields, swings, slides, and play apparatus. Each subdivision development shall satisfy its public community recreational requirement by:

a. Dedicating and conveying to the County the type of public recreational facilities that are most likely to be appropriate for the community consistent with the County's Parks and Recreation Master Plan. Each public community recreation area shall satisfy the standards set forth in the Master Plan as to size, shape, location, slope, access and usefulness to the community and shall be not less than the product of 1/35 of an acre multiplied by the maximum number of lots to be developed or maximum number of dwelling units proposed, whichever is greater. The County shall be authorized to sell any land dedicated pursuant to this section, but the proceeds shall be used only for the acquisition, or development of other public recreation facilities.

b. In lieu of dedicating public community recreation areas, a fee shall be paid to the County. The fee shall be equivalent to the post-development tax value of the area of land required to be dedicated pursuant to a. above. In order to serve the public recreation needs of more than one development or subdivision, the County shall establish recreation service districts and fees paid in lieu of dedication hereunder shall be expended for acquisition or development of recreation or park facilities or areas.

c. The County may require payment of the fee in lieu of dedication at the time of final approval upon finding that the land required to be dedicated is not suitable for public community recreation purposes or upon finding that the recreational needs of the proposed development can be met by other public recreational facilities planned or constructed by the County within the recreational service district where located. The County shall decide during the review and approval process as to which option shall be available.

d. This section shall not apply to non-residential subdivisions or family subdivisions. Any lot created using subsection (d) shall place a certificate on the plat stating that any conversion of a non-residential lot to residential use shall require compliance with Section 7.5(A)(2) before the residential use may be made of the lot.

B. Easements, Dedications, and Reservations

All easements, dedications and reservations shall be shown on the plat with notes stating their purpose.

(1) Utility Easements

Easements shall be provided for utilities along lot lines where necessary to provide utilities to every platted lot. The subdivider and the utility companies shall agree on the width of easements needed. Easements for subsurface sewage disposal systems shall be staked prior to approval and shall be designated on the Final Plat as a utility easement and described by bearings and distances and acreage.

(2) Pedestrian Easements
In such cases and at such locations as the Board of Commissioners deems advisable, easements along side of rear lot lines not exceeding twenty (20) feet in width may be required for pedestrian or bicycle traffic to and from schools, neighborhood parks, and other public places.

(3) Drainage Easements
In cases in which a subdivision is traversed by a stream or drainage channel there shall be provided if requested a storm water easement of such width along each side of the stream as the Board of Commissioners deems necessary for the purpose of widening, deepening, protecting, relocation, or otherwise improving such drainage easement. Other drainage easements may be required for the proper drainage of all lots.

(4) Sight Distance Easements at Intersections
Triangular sight distance easements at all public and private street intersections shall be shown in dashed lines and so noted on the Final Plat. These easements will remain free of all structures, trees, shrubbery, driveways, and signs, except utility poles, fire hydrants, and traffic control signs. Sight distance easements shall be in accordance with the requirements of the State Division of Highways.

(5) Dedication of Waterways
Lakes, ponds, creeks, and similar areas will be accepted by the County for maintenance only if sufficient land is dedicated as a public recreation area or park or if such area constitutes a necessary part of the drainage control system. The suitability of such dedicated areas shall be evaluated by the Planning Board prior to being considered for acceptance by the Board of Commissioners.

C. Community Assets
In all subdivisions due regard may be shown for all natural features such as large trees and water courses and for historical spots and similar community assets which, if preserved will add attractiveness and value to the property.

7.6 Zoning or Other Regulations

No Final Plat of land within the force and effect of an existing zoning regulation shall be approved unless it conforms to such regulations.

Wherever there is a discrepancy between minimum standards or dimensions noted herein and those contained in the zoning regulations or other agencies regulations the more stringent standards shall apply.

7.7 Conservation Subdivision—Alternative Standards for Development

As an alternative to conventional layouts, Chatham County encourages the preservation of large, contiguous blocks of land, herein referred to as Conservation Space. Conservation Space shall consist of Open Space and Natural Space. When a project voluntarily preserves Conservation Space in accordance with this Section, a project can increase the number of units that would be allowed on the overall property by ten (10) percent. Calculation of the density bonus shall be based on the applicable underlying land use regulation(s) dictating allowable development density.

The requirements for this option are detailed below.

A. Conservation Space Requirement

A minimum of 40 percent of the project area shall be retained as Conservation Space for a conservation subdivision design. Land required to be protected under other regulatory provisions, such as riparian buffers and floodplain, are permitted to be included in the Conservation Space calculation.

B. Composition of Conservation Space

A maximum of 20% of the required Conservation Space shall be Open Space and a minimum of 80% of such Conservation Space shall be Natural Space, unless it can be demonstrated that no practical alternative exists for preserving that amount of Natural Space. See The Chatham County Conservation Subdivision Guidelines for Conservation Space Selection.

C. Connectivity of Conservation Space

At least 50 percent of the proposed Conservation Space shall consist of a contiguous tract. The Conservation Space should adjoin any neighboring areas of Conservation Space on other parcels whenever practicable.

D. Permitted Uses of Conservation Space

Provided it includes the required divisions of Open Space and Natural Space and otherwise conforms with the Chatham County Conservation Subdivision Guidelines, uses of Conservation Space may include the following:

(1) Conservation

Conservation of natural resources, archeological resources or historical resources

(2) Agriculture

Existing and ongoing bona fide agriculture, horticulture, or silviculture, provided that all applicable best management practices are used to minimize environmental impacts.

(3) Recreation

Active recreational uses of Open Space are permitted, given that active uses such as tennis courts, swimming pools, ball fields, playgrounds, et cetera are limited to a maximum of 5 percent of the total Conservation Space area.

(4) Stormwater Management

Use for stormwater management is permissible consistent with the Chatham County Stormwater Ordinance requirements.

(5) Utility Easements

Easements for drainage, access to utilities, and underground utility lines.

(6) Water, Septic, and Sewer Systems

Shared water, septic and sewer infrastructure is allowed in Open Space, but not in Natural Space areas unless approved by the Environmental Quality Department.

(7) Trails

All trails, provided that Best Management Practices and an approved Trail Management Plan are employed for recreational purposes, such as pedestrian, mountain biking, general recreation and equestrian uses.

E. Prohibited Uses of Conservation Space

(1) Use of Motor Vehicles

(Except for maintenance purposes as provided for in the Open Space Management Plan).

(2) Roads, Parking Lots and Impervious Surfaces

(Except when necessary for access. to active recreational uses).

F. Ownership of Conservation Space

The applicant must identify the current and intended future owner(s) of the Conservation Space who is/are responsible for maintaining such area/facilities. The responsibility for maintaining the Conservation Space and any facilities located thereon shall be borne by the owner unless otherwise specified in a Conservation Space Management Plan approved by the County.

G. Management of Conservation Space

The applicant shall submit a management plan for all proposed Conservation Space. Upon initial approval of the management plan by the County, changes to the plan shall be allowed only when approved by the County Board of Commissioners. The plan shall be referred to as the "Conservation Space Management Plan" and shall include:

(1) A statement allocating maintenance responsibilities and establishing guidelines for the upkeep of Conservation Space and all associated facilities;

(2) Cost estimates for all maintenance, operation and insurance needs for the Conservation Space, as well as a plan that outlines the means by which funds will be obtained for such expenses;

(3) Establishment of criteria for enforcement of the plan.

(4) Prior to any clearing or grading of the site, protective fencing should be established around all Natural Space areas. Fencing shall be placed outside the critical root zone or dripline, whichever is greater, of any trees.

H. Legal Instrument for Permanent Protection

Conservation Space proposed for a conservation subdivision shall be protected in perpetuity by a binding legal document that is recorded with the deed upon review and approval by the County. The document shall be one of the following three (3) options:

(1) Permanent Conservation Easement.

A permanent conservation easement in favor of either:

- A land trust or similar conservation-oriented non-profit organization with legal authority to accept such easements. The organization shall be bona fide and in perpetual existence and the conveyance instruments shall contain an appropriate provision for retransfer in the event the organization becomes unable to carry out its functions; or
- A governmental entity with an interest in pursuing goals consistent with the intentions of this Section.

(2) Permanent Restrictive Covenant.

A permanent restrictive covenant for conservation purposes.

(3) Alternative Land Use Restriction.

An equivalent legal tool that provides permanent protection, if approved by the County Attorney. The instrument for permanent protection shall include all use restrictions contained in this section, as well as any additional reasonable restrictions the applicant chooses to place on the use of the open space.

I. Density Bonuses

The base density for a conservation subdivision is determined by the underlying land use regulation, establishing otherwise allowable unit density (minus any regulated floodplain,

riparian buffers where building is prohibited under Chatham County ordinances) in which the development parcel is located. Permitted housing densities shall not exceed the maximum allowances of any applicable water supply watershed requirements.

J. Agricultural Preservation Density Bonus

Conservation subdivisions proposed for the purposes of sustaining existing on-site bona fide agricultural operations are entitled to a five (5) percent increase in permitted density (this in addition to the ten (10) percent density bonus). Ideally, residential lots in such developments should be located in areas less suitable for agricultural production, while prime farmland areas of the property should be reserved as Conservation Space. It is strongly recommended that development parcels be located where agricultural operations do not interfere with the safety and/or well being of potential future residents. Upon completion such agricultural uses, all lands previously occupied by those uses shall be preserved in perpetuity as natural space, and shall not qualify for future development.

K. Lot and Structure Placement

(1) Lot Size

There is no minimum size for lots in a conservation subdivision; however the lot size shall be adequate to provide for minimum setbacks and any required infrastructure or services.

(2) Structure Placement.

a. Setbacks

Structures within a conservation subdivision should be placed as closely to internal roads as practical. The reviewing agency may reduce the front yard setback to a minimum of five (5) feet when necessary. In such cases, the reviewing agency must take into consideration sound engineering, public safety concerns and community character when applying standards. Vegetative buffers should be left between new development and existing residential development where possible.

b. *Separation*

Structures within conservation subdivisions may be located in the side yard setback required by the zoning district regulations. Structures may be placed as closely together as permitted by the North Carolina State Building Code.

(3) Lot Proximity to Open Space.

Open space shall be accessible to the largest possible number of lots within the development. To achieve this, the majority of lots should abut open space to provide residents with direct views and access. Safe and convenient pedestrian access to the open space from all adjoining lots shall be provided, except in the case of farmland or other resources areas vulnerable to human disturbance.

L. Private Driveway Easements

Private driveway easements may be used in place of public and/or private roads where proposed to provide access to two (2) or fewer lots. The minimum required easement width is 30 feet and shall have a centerline length of no more than 200 feet. Proposed driveway easements should be clearly identified on all plans and plats with a description of what lots the easement is proposed to serve. Final Plats creating driveway easements must contain a note that conveys maintenance responsibility of the easement to the home owners utilizing it to access their property. The note shall specifically state that the easement(s) must be maintained to allow clear passage for emergency response vehicles. Driveway easements are not subject to the requirements for public or private roads.

M. Public and Private Road Standards

All conservation subdivisions with proposed roads and rights-of-way shall follow the standards in Section 7.2.

(1) The Planning Department may accept public rights-of-way in conservation subdivisions of 15 or fewer lots.

(2) Conservation subdivisions of 15 or fewer lots shall follow the provisions of Section 3 in order to record a final plat prior to completion of the required improvements.

N. Review and Approval

(1) Conservation subdivisions of fifteen (15) or fewer Lots are reviewed and approved by the Planning Department using the following process:

a. The applicant shall submit the required number of prints of the plat to the Planning Department. Applicants shall pay any administrative fee established by the County at the time of the application or request. The staff shall inform the applicant of necessary modifications to the plat. Conservation Subdivisions involving access to more than two lots shall have the access road name approved by the Emergency Operations Center (EOC) and Board of Commissioners.

b. Where public service is available, public sewer shall be provided and installed in such a manner as to serve adequately all lots within the subdivision. Where public service is not available, a soil scientist, licensed in North Carolina, shall certify that suitable soils are available for each lot in accordance with applicable state and local rules. The Chatham County Environmental Health Department will review soil scientist reports and maps and indicate its' adequacy prior to proceeding with final plat approval. Installation of all sewage disposal systems shall conform to appropriate regulations of any governmental agency having jurisdiction thereof.

c. The Planning Department shall review the plat and if everything is in order, the Director of Planning or his/her authorized agent shall approve the plat. (See Appendices)

d. The plat shall be submitted for recording by the applicant within the time limit specified in these regulations.

e. In order for a subdivision to be processed under these provisions, the following requirements must be met:

(1) The plat must meet all requirements and standards for Final Plats as required in section 6.4.
(2) There can be no variances requested from the subdivision regulations.
(3) There cannot be, as a result of such subdivision, a creation of any lots which fail to meet all requirements of the subdivision regulations.
(4) No subdivider may use the this procedure in the same immediate location (approximately fifteen hundred [1,500] feet) for a period of twelve (12) months after getting subdivision approval using said procedure in said location, if he/she owns, has an option on, or has any legal interest in any property adjacent to the property to be subdivided.
(5) Additional street right-of-way dedication shall be shown on the plat in cases where the existing right-of-way does not meet the present minimum right-of-way width.
(6) If a conservation subdivision does not meet the above listed requirements it shall be reviewed as a major subdivision, unless otherwise provided.

f. Any appeals of a staff decision regarding a Conservation Subdivision shall follow the process in Section 5.2(F).

(2) Conservation subdivisions in excess of fifteen (15) lots shall be reviewed as a major subdivision.

SECTION 8 DEVELOPMENT PREREQUISITE TO FINAL APPROVAL

The following tangible improvements are required before Final Plat approval in order to assure the physical reality of a subdivision for which recordation will establish legality.

8.1 Required Improvements

Every subdivision developer shall be required to grade and improve streets, install monuments, sanitary sewers, storm drainage, water mains, and other utilities, and make other site improvements in accordance with the following specifications.

A. Monuments and Lot Markers
Iron pins not less than three-fourths (3/4) inches in diameter and eighteen (18) inches long shall be set at all street corners, at points where the street lines intersect the exterior boundaries of the subdivision, at the intersection of curves and tangents along street lines, at all lot corners, and at all corners of the plat. These pins shall be driven so as to be snug in the ground and shall not have over six inches exposed above the finished grade. The location of these pins shall be identified with wooden stakes or other suitable markers at the time the plat is submitted for final approval so that all necessary inspections may be made by the various agencies involved in the review of the subdivision. At least one concrete monument shall be set for major subdivisions with new roads. Additional concrete monuments may be required where deemed necessary due to large acreage and/or a large number of lots.

B. Street Development
Every subdivision developer shall be required to grade and improve new streets. These improvements for public roads shall be in accordance with the minimum standards for design as specified in the most recent appropriate road standards by the Division of Highways. Private street improvements shall meet the design and construction standards specified in these regulations.

C. Storm Drainage
See Stormwater Management Ordinance for applicable rules and regulations.

D. Sanitary Sewers
Where public service is available, public sewer shall be provided and installed in such a manner as to serve adequately all lots within the subdivision. Where public service is not available, a soil scientist, licensed in North Carolina, shall certify that suitable soils are available for each lot in accordance with applicable state and local rules. The Chatham County Environmental Health Department will review soil scientist reports and maps and indicate its' adequacy prior to proceeding with final plat approval. Installation of all sewage disposal systems shall conform to appropriate regulations of any governmental agency having jurisdiction thereof.

E. Water Supply Systems
Where public service is available, public water shall be provided and installed in such a manner as to serve adequately all lots within the subdivision. Where public service is not available, each lot must have a suitable water supply system approved by the Chatham County Health Department or other appropriate agency. Installation of all water supply systems shall conform to appropriate regulations of any governmental agency having jurisdiction thereof.

F. Installation of Utilities

All utility services shall be so designed and installed as to conform with all appropriate state, local and utility agency requirements. Underground electric and telephone lines are encouraged and may be required in subdivisions where lot densities and soil conditions exist to make the installation of such facilities economically feasible in the opinion of the Board of Commissioners.

G. Sidewalks

Sidewalks, sidepaths, or improved trails may be required where deemed necessary by the Board of Commissioners as an integral part of a pedestrian traffic system within a one (1) mile radius of existing or planned schools, neighborhood recreation or commercial areas, or other public places. Where provided, sidewalks shall be located not less than one (1) foot from the property line to prevent interference or encroachment by fencing, walls, hedges or other planting or structures placed on property lines at a later date. Sidewalks, sidepaths, or improved trails shall be installed to conform with accepted standards of good practice.

H. Street Name Signs and Traffic Signs

Appropriate street signs enable strangers, delivery concerns, and even potential lot buyers to find their way around. Street name signs shall be installed at all intersections. Traffic signs shall also be installed where required. The signs shall be of standard design, size and material as approved by the Division of Highways unless provided by other county ordinances addressing signs. State and local permits for signs may be required prior to installation.

I. Guarantee in Lieu of Completed Improvements

No final subdivision plat shall be approved by the Board of Commissioners or accepted for recording by the County Register of Deeds until one of the following conditions has been met:

(1) All required improvements have been constructed in a satisfactory manner and approved by the Board of Commissioners, or

(2) The Board of Commissioners and/or any of the certifying agencies have accepted a security for completion and maintenance of improvements as established in Section 3 of these regulations, whereby improvements may be made and utilities installed without cost to public bodies in the event of default of the subdivider. This also assures the prospective purchaser that improvements shall be installed as stated on the Final Plat.

SECTION 9 SPECIAL DEVELOPMENT STANDARDS PLANNED UNIT DEVELOPMENTS

9.1 Procedure for First Plat and Construction Plan Approval

All master plans for planned unit developments shall be reviewed and granted final approval prior to recordation. The time limit on the validity of approvals may be extended by the Board of Commissioners for Planned Unit Developments.

9.2 Additional Required Information for First Plat Approval

A. Existing and proposed land uses and the approximate density of the proposed dwellings.

B. The approximate location of any road shown on the major thoroughfare plan.

C. Public uses, including schools, parks, play areas, and other open spaces, both existing and proposed.

D. Areas proposed to be conveyed, dedicated, or reserved for parks, playgrounds, swimming pools, recreation buildings, supporting commercial areas, similar public and semi-public uses.

E. A plan showing the approximate location of common open area.

F. A development schedule indicating (1) the approximate date when construction of the project can be expected to begin; (2) the stages in which the project will be built and the approximate date when construction of each stage can be expected to begin; (3) the anticipated rate of development; (4) the approximate dates when the development of each of the stages in the development will be completed; and (5) the area and location of common open space that will be provided at each stage.

G. An estimate of population and density and extent of activities to be allocated to parts of the project.

H. A tabulation of the land area to be devoted to various uses and activities and overall densities.

I. A market analysis and financial statement may be requested by the Planning Board to help determine the demand for the development and the probability of its completion.

9.3 Design Standards for Planned Unit Development

A. Common Open Space

(1) The location, shape, size, and character of the common open space shall be reviewed in detail.

(2) Common open space must be used for amenity or recreational purposes. The uses authorized for the common open space must be appropriate to the scale and character of the planned development considering its size, density, expected population, topography, and the number and type of dwellings to be provided. There shall be no less than fifteen (15) percent of the total land area

reserved as open space. Roads and road right-of-ways shall not be calculated as open space.

(3) Common open space must be suitably improved for its intended use but common open space containing natural features worthy of preservation may be left unimproved. The buildings, structures, and improvements which are permitted in the common open space must be appropriate to the uses which are authorized for the common open space and must conserve and enhance the amenities of the common open space with regard to its topography and unimproved condition.

(4) The use and improvements of common open space must be planned in relation to any existing or proposed public or semi-public open space which adjoins or which is within close proximity to the perimeter of the planned development.

(5) All land shown on the final master plan as common open space must be conveyed under one of the following options:

a. It may be conveyed to a public agency which will agree to maintain the common open space and any building, structures, or improvements which have been placed on it.
b. It may be conveyed to a trustee(s) provided in a deed of record which establishes an association or similar organization for the maintenance of the planned development. The common open space may be conveyed to the trustees subject to the approval of the Planning Board which will result in the restriction of the common open space to the uses specified on the final plan, and which will provide for the maintenance of the common open space in a manner which assures its continuing use for its intended purposes.

(6) No common open space may be put to any use not specified on the final master plan unless the final master plan has been amended to permit that use.

B. Minimum Size

The minimum size of a planned unit development shall be twenty (20) acres.

C. Roads

General subdivision road standards set out or referenced in these regulations may be waived for Planned Unit Developments provided that the intent of these regulations is not negated or lessened. Privately maintained roads may be allowed by the Board of Commissioners provided that the status and maintenance of said roads is made known by appropriate notes on the plat, in deeds, protective covenants or other means approved by the Board of Commissioners. Roads shall be constructed to a generally accepted standard practice of design approved by the Board of Commissioners and the construction of said roads shall be certified by an engineer licensed to practice in North Carolina.

D. Other Design Standards

Design standards set out in these subdivision regulations may be waived for Planned Unit Developments provided that the intent of these regulations is not nullified or lessened and provided that sufficient proof is given substantiating the adequacy of the alternative design.

SECTION 10 COMPACT COMMUNITIES

10.1 Procedure

All master or concept plans, first plats, construction plans and final subdivision plats shall be reviewed and approved prior to recordation.

10.2 Required Information

All applications for compact communities shall contain the information required by the separate Chatham County Compact Community Ordinance.

10.3 Standards

All compact communities shall comply with the provisions of the Chatham County Compact Community Ordinance.

SECTION 11 APPENDIX A: CERTIFICATION FORMS FOR INITIAL AND FINAL APPROVALS

FIRST PLAT

Form 1

ADEQUATE SOILS
CERTIFICATION OF REVIEW BY LICENSED SOIL SCIENTIST

I HEREBY CERTIFY THAT LOT(S)_____
SHOWN ON THIS PLAT FOR_____HAVE BEEN REVIEWED AS APPROPRIATE AND WITH RESPECT TO THE REQUIREMENTS SET FORTH IN 15A NCAC 2T .0600 FOR SINGLE-FAMILY RESIDENCE WASTEWATER IRRIGATION SYSTEMS AS AMENDED FROM TIME TO TIME. AS OF THIS DATE, AND BASED ON THIS REVIEW OF EXISTING SITE CONDITIONS THE LOT (S) NUMBERED ABOVE ON THIS PLAT MEETS THESE REGULATIONS.

CERTIFICATION DOES NOT REPRESENT APPROVAL OR A PERMIT FOR ANY SITE WORK. THE NORTH CAROLINA DEPARTMENT OF ENVIRONMENT AND NATURAL RESOURCES, DIVISION OF WATER QUALITY HAS THE AUTHORITY FOR THE REVIEW, APPROVAL, OR DENIAL OF APPLICATIONS FOR NON-DISCHARGE PERMITS. THE ISSUANCE OF NON-DISCHARGE PERMITS IS BASED ON REGULATIONS IN FORCE AT THE TIME OF PERMITTING AND IS DEPENDENT ON THE SATISFACTORY COMPLETION OF A PERMIT APPLICATION AND ALL REQUIRED SUPPORTING INFORMATION.

ANY CHANGE IN USE OR ANY SITE ALTERATION MAY RESULT IN SUSPENSION OR REVOCATION OF CERTIFICATION.

_____ _____
DATE NC LICENSED SOIL SCIENTIST (SEAL)

Form 2

ADEQUATE SOILS CERTIFICATION OF REVIEW BY LICENSED SOIL SCIENTIST
I HEREBY CERTIFY THAT LOT(S)_____ SHOWN ON THIS PLAT FOR _____ HAVE BEEN REVIEWED IN ACCORDANCE WITH THE .1900 NORTH CAROLINA LAWS AND RULES FOR SEWAGE TREATMENT AND DISPOSAL SYSTEMS. AS OF THIS DATE, AND BASED ON THIS REVIEW OF EXISTING SITE CONDITIONS THE LOTS NUMBERED ABOVE ON THIS PLAT MEETS THESE REGULATIONS.

CERTIFICATION DOES NOT REPRESENT APPROVAL OR A PERMIT FOR ANY SITE WORK. FINAL SITE APPROVAL FOR ISSUANCE OF IMPROVEMENT PERMITS IS BASED ON REGULATIONS IN FORCE AT THE TIME OF PERMITTING AND IS DEPENDENT ON SATISFACTORY COMPLETION OF INDIVIDUAL SITE EVALUATIONS FOLLOWING APPLICATION FOR AN IMPROVEMENT PERMIT DETAILING A SPECIFIC USE AND SITING.

ANY CHANGE IN USE OR ANY SITE ALTERATION MAY RESULT IN SUSPENSION OR REVOCATION OF CERTIFICATION.

_____ _____
Date NC LICENSED SOIL SCIENTIST (SEAL)

Form 3

CERTIFICATION OF PLANS OF STREETS

I hereby certify that the plans for streets in the subdivision shown hereon meet the design standards and specifications of the Department of Transportation, Division of Highways except as noted hereon.

_____ 20_____

_____

District Engineer

FINAL PLAT

Form 4

CERTIFICATE OF APPROVAL FOR RECORDING

I hereby certify that the subdivision plat shown hereon has been found to comply with the subdivision regulations for Chatham County, with the exception of such variances, if any, as noted in the minutes of the Board of Commissioners, and that it has been approved by the body for recording in the Office of the County Register of Deeds.

_____ 20_____

_____

Chairman, Chatham County Board of Commissioners

CERTIFICATE OF APPROVAL FOR RECORDING

I hereby certify that the subdivision plat shown hereon has been found to comply with the subdivision regulations for Chatham County and that it has been approved for recording in the Office of the County Register of Deeds.

_____ 20_____

_____

Planning Director or Authorized Representative

Form 5

APPROVAL FOR MINOR SUBDIVISIONS

I hereby certify that the subdivision plat shown hereon is a minor subdivision and has been found to comply with the subdivision regulations for Chatham County. The plat has been approved for recording in the Office of the County Register of Deeds.

_____ 20_____

_____

Director of Planning or Authorized Agent

Form 6

OWNER CERTIFICATION OF PLAT BEING EXEMPT FROM THE SUBDIVISION REGULATIONS

I (we) hereby certify that I am (we are) the owner(s) of the property shown and described hereon and that said property is exempt from the subdivision regulations of Chatham County by definition.

_____ 20_____

_____
Owner(s) or Authorized Agent and Title

Form 7

CERTIFICATION OF PLAT BEING EXEMPT FROM THE SUBDIVISION REGULATIONS

I hereby certify that the property shown and described hereon is exempt from the subdivision regulations of Chatham County by definition.

_____ 20_____

_____
Planning Director or Authorized Representative

Form 8

CERTIFICATION OF OWNERSHIP AND DEDICATION

I (we) hereby certify that I am (we are) the owner(s) of the property shown and described hereon and that I (we) hereby adopt this plan of subdivision with my (our) free consent, and dedicate all right-of-ways, streets, alleys, walks, easements, parks, and other open spaces to public or private use as noted.

_____ 20_____

_____

_____
Owner(s)

Form 9

CERTIFICATE FOR LOTS CREATED FOR NON-RESIDENTIAL USES

I hereby certify that this plat creates lot(s) for non-residential uses, and such lot(s) were exempt from Section 7.5(A)(2) of the Chatham County Subdivision Regulations. Any conversion of the lot(s) shown on this plat as non-residential lot(s) to residential uses shall

require compliance with Section 7.5(A)(2) of the Chatham County Subdivision Regulations before any residential use may be made of the lot(s).

_____ 20_____

_____

_____

Owner(s)

Form 10

CERTIFICATION OF THE APPROVAL OF STREETS

I hereby certify that the streets and related improvements have been installed according to plans approved by the Division of Highways, except as noted hereon; or proper provisions have been made for their installation.

_____ 20_____

_____

District Engineer, N.C. Division of Highways

Form 11

CERTIFICATION OF THE APPROVAL OF UTILITIES

I hereby certify that the _____ improvements have been installed in an acceptable manner and according to the specifications of the Chatham County utility policy and/or the Chatham County Subdivision Regulations, except as noted hereon; or proper provisions have been made for their installation.

_____ 20_____

_____ _____

Signature Title

Form 12

Certificate of Agricultural District

Note: These parcels are located near an area that is presently used for agricultural purposes. Normal agricultural operations may conflict with residential use. NC law (General Statutes Section 106-701) provides some protection for existing agricultural operations.

Form 13

Construction of the entire private travelway shall be completed prior to the issuance of a building permit for a building on any lot served by the easement per section 7.4.B(3).

Form 14

The stub street(s) shown on this plat is provided for the purpose of future road extension. Once the road is extended and/or connects to another road, any easement provided for the purpose of a temporary turn around may be removed through the lawful actions of the property owner.